William Stallings
Computer Organization and Architecture
10th Edition

© 2016 Pearson Education, Inc., Hoboken, NJ. All rights reserved.

# Chapter 11

## Digital Logic

© 2016 Pearson Education, Inc., Hoboken, NJ. All rights reserved.

# Boolean Algebra

- Mathematical discipline used to design and analyze the behavior of the digital circuitry in digital computers and other digital systems
- Named after George Boole
  - English mathematician
  - Proposed basic principles of the algebra in 1854
- Claude Shannon suggested Boolean algebra could be used to solve problems in relay-switching circuit design
- Is a convenient tool:
  - Analysis
    - It is an economical way of describing the function of digital circuitry
  - Design
    - Given a desired function, Boolean algebra can be applied to develop a simplified implementation of that function

© 2016 Pearson Education, Inc., Hoboken, NJ. All rights reserved.

# Boolean Variables and Operations

- Makes use of variables and operations
  - Are logical
  - A variable may take on the value 1 (TRUE) or 0 (FALSE)
  - Basic logical operations are AND, OR, and NOT
- AND
  - Yields true (binary value 1) if and only if both of its operands are true
  - In the absence of parentheses the AND operation takes precedence over the OR operation
  - When no ambiguity will occur the AND operation is represented by simple concatenation instead of the dot operator
- OR
  - Yields true if either or both of its operands are true
- NOT
  - Inverts the value of its operand

© 2016 Pearson Education, Inc., Hoboken, NJ. All rights reserved.

# Table 11.1 Boolean Operators

## (a) Boolean Operators of Two Input Variables

| P | Q | NOT P ($\overline{P}$) | P AND Q ($P \bullet Q$) | P OR Q ($P + Q$) | P NAND Q ($\overline{P \bullet Q}$) | P NOR Q ($\overline{P + Q}$) | P XOR Q ($P \oplus Q$) |
|---|---|---|---|---|---|---|---|
| 0 | 0 | 1 | 0 | 0 | 1 | 1 | 0 |
| 0 | 1 | 1 | 0 | 1 | 1 | 0 | 1 |
| 1 | 0 | 0 | 0 | 1 | 1 | 0 | 1 |
| 1 | 1 | 0 | 1 | 1 | 0 | 0 | 0 |

## (b) Boolean Operators Extended to More than Two Inputs (A, B, . . .)

| Operation | Expression | Output = 1 if |
|---|---|---|
| AND | $A \bullet B \bullet \ldots$ | All of the set {A, B, …} are 1. |
| OR | $A + B + \ldots$ | Any of the set {A, B, …} are 1. |
| NAND | $\overline{A \bullet B \bullet \ldots}$ | Any of the set {A, B, …} are 0. |
| NOR | $\overline{A + B + \ldots}$ | All of the set {A, B, …} are 0. |
| XOR | $A \oplus B \oplus \ldots$ | The set {A, B, …} contains an odd number of ones. |

© 2016 Pearson Education, Inc., Hoboken, NJ. All rights reserved.

# Table 11.2
# Basic Identities of Boolean Algebra

| Basic Postulates | | |
|---|---|---|
| $A \bullet B = B \bullet A$ | $A + B = B + A$ | Commutative Laws |
| $A \bullet (B + C) = (A \bullet B) + (A \bullet C)$ | $A + (B \bullet C) = (A + B) \bullet (A + C)$ | Distributive Laws |
| $1 \bullet A = A$ | $0 + A = A$ | Identity Elements |
| $A \bullet \overline{A} = 0$ | $A + \overline{A} = 1$ | Inverse Elements |
| **Other Identities** | | |
| $0 \bullet A = 0$ | $1 + A = 1$ | |
| $A \bullet A = A$ | $A + A = A$ | |
| $A \bullet (B \bullet C) = (A \bullet B) \bullet C$ | $A + (B + C) = (A + B) + C$ | Associative Laws |
| $\overline{A \bullet B} = \overline{A} + \overline{B}$ | $\overline{A + B} = \overline{A} \bullet \overline{B}$ | DeMorgan's Theorem |

© 2016 Pearson Education, Inc., Hoboken, NJ. All rights reserved.

| Name | Graphical Symbol | Algebraic Function | Truth Table |
|---|---|---|---|
| AND | | $F = A \bullet B$<br>or<br>$F = AB$ | A B F<br>0 0 0<br>0 1 0<br>1 0 0<br>1 1 1 |
| OR | 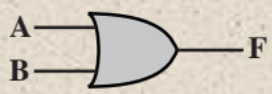  | $F = A + B$ | A B F<br>0 0 0<br>0 1 1<br>1 0 1<br>1 1 1 |
| NOT | 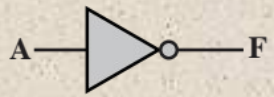  | $F = \overline{A}$<br>or<br>$F = A'$ | A F<br>0 1<br>1 0 |
| NAND | | $F = \overline{AB}$ | A B F<br>0 0 1<br>0 1 1<br>1 0 1<br>1 1 0 |
| NOR | 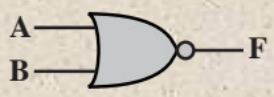  | $F = \overline{A + B}$ | A B F<br>0 0 1<br>0 1 0<br>1 0 0<br>1 1 0 |
| XOR | | $F = A \oplus B$ | A B F<br>0 0 0<br>0 1 1<br>1 0 1<br>1 1 0 |

**Figure 11.1 Basic Logic Gates**

© 2016 Pearson Education, Inc., Hoboken, NJ. All rights reserved.

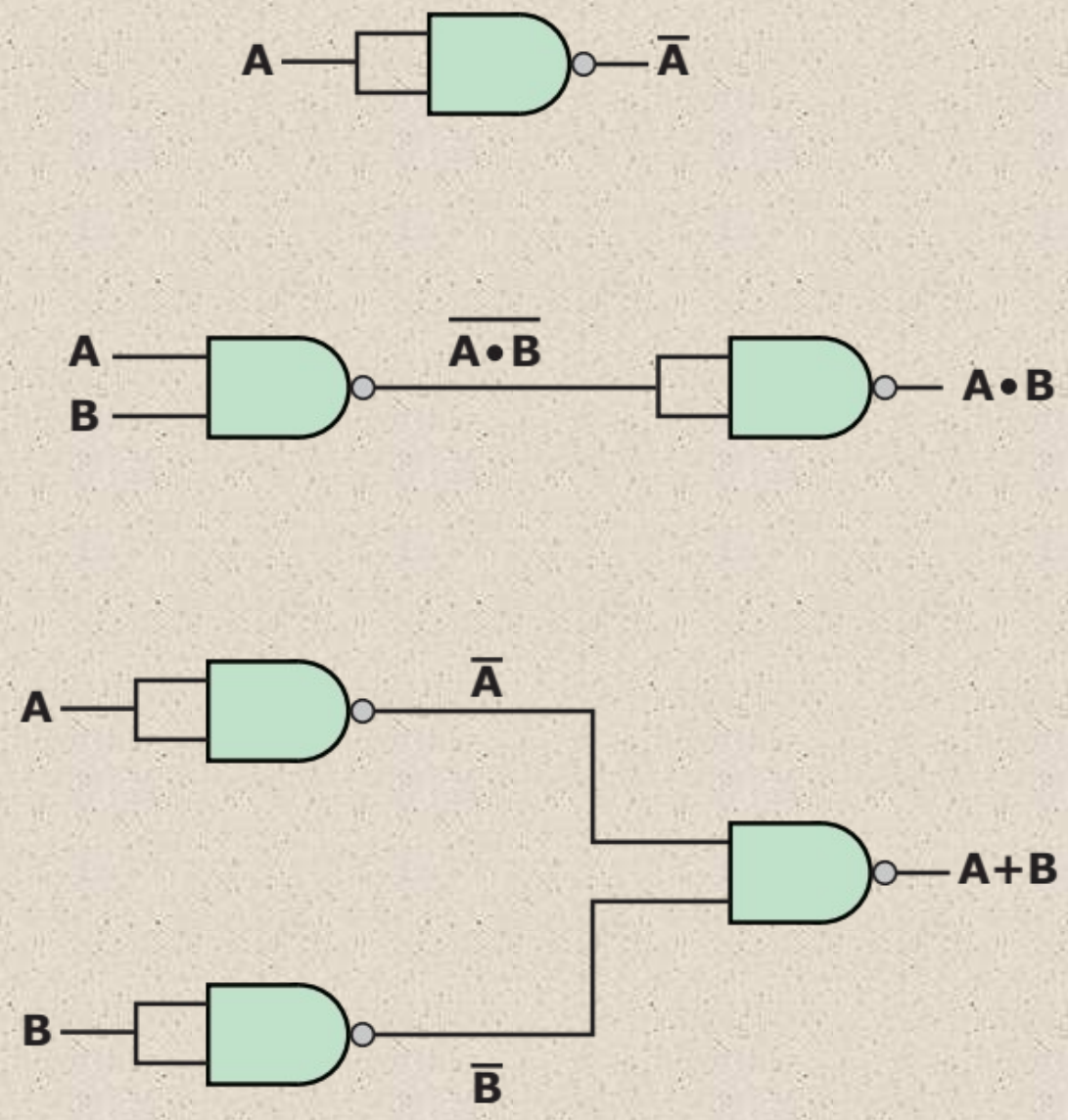


**Figure 11.2 Some Uses of NAND Gates**

© 2016 Pearson Education, Inc., Hoboken, NJ. All rights reserved.

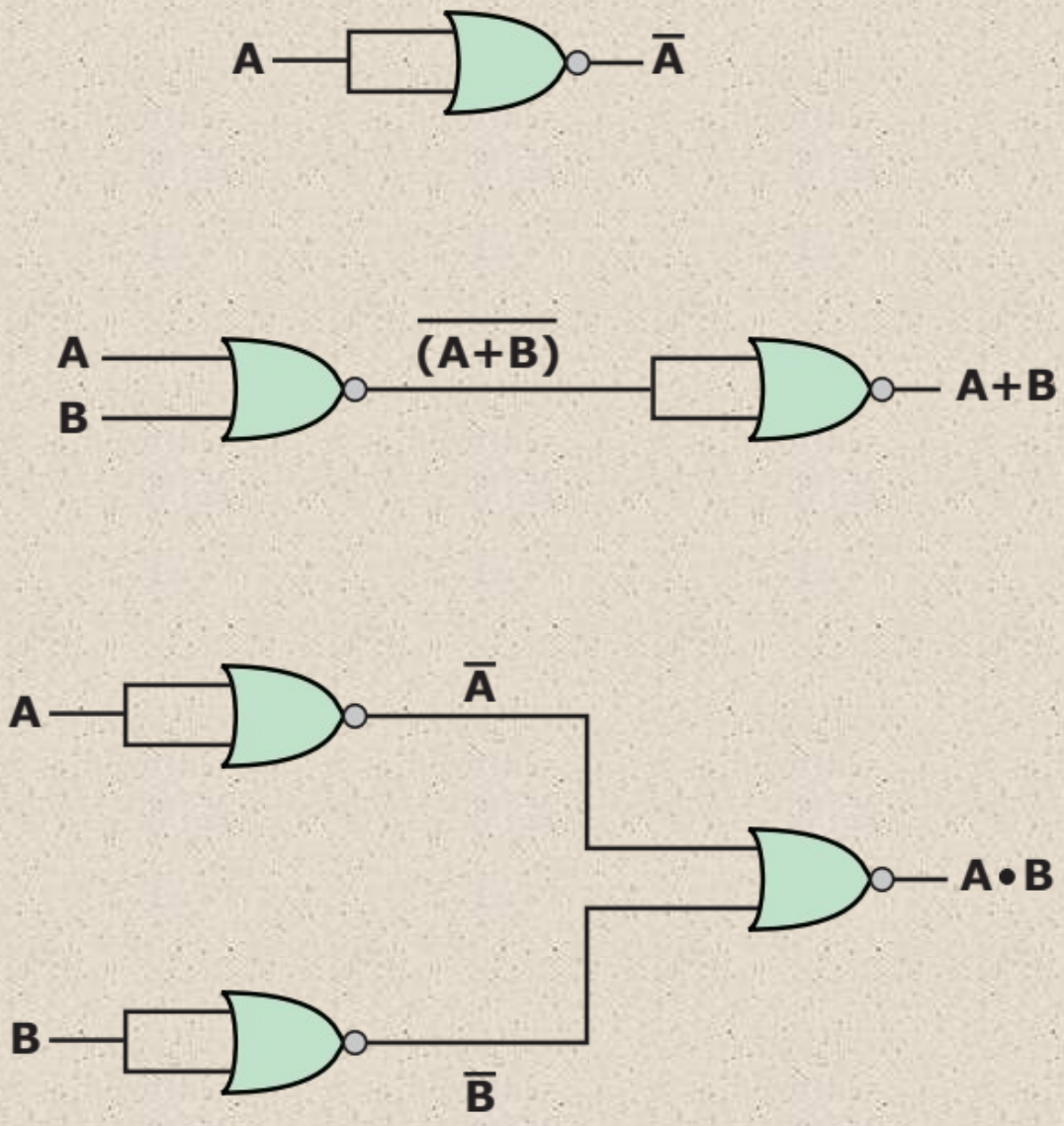


**Figure 11.3 Some Uses of NOR Gates**

© 2016 Pearson Education, Inc., Hoboken, NJ. All rights reserved.

# Combinational Circuit

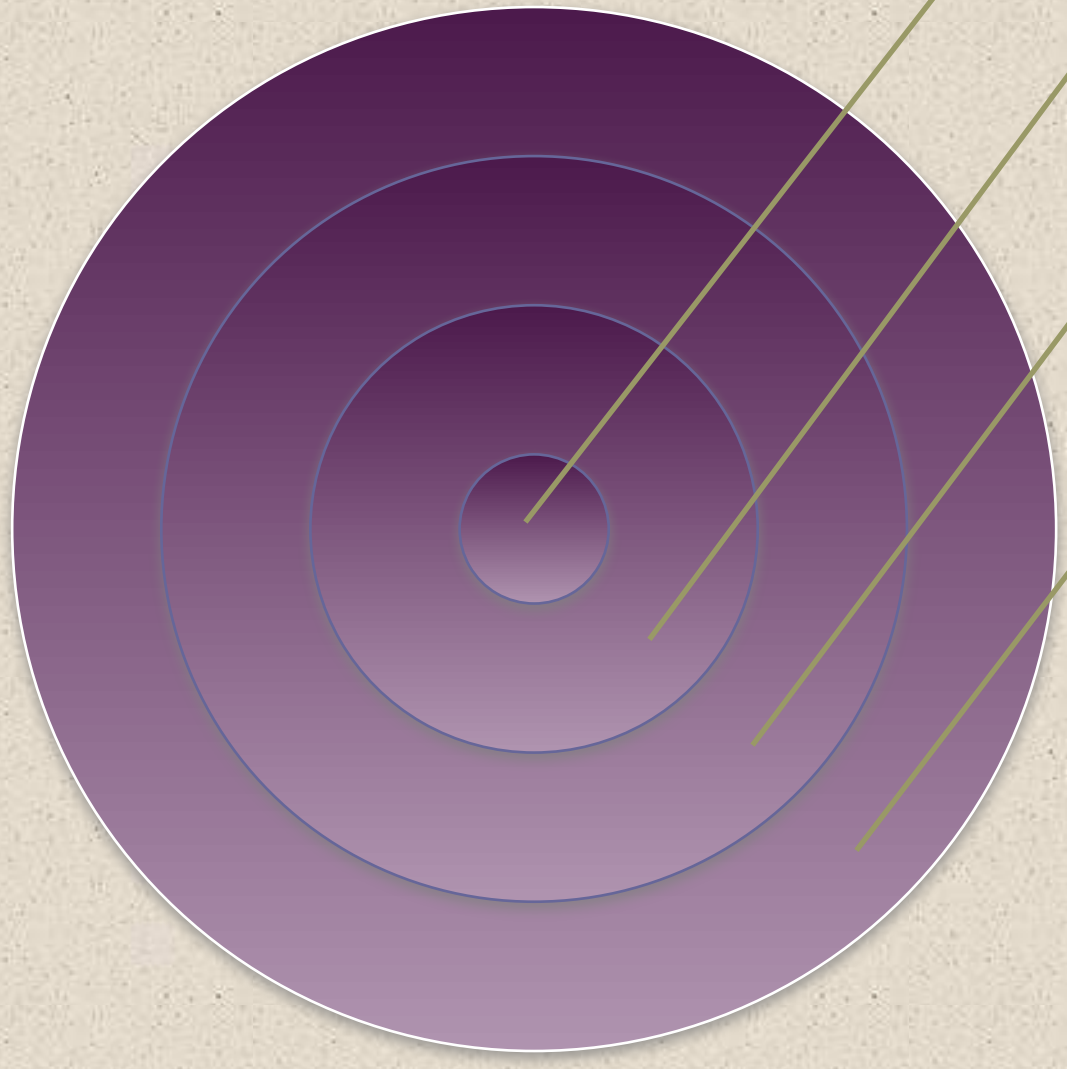

An interconnected set of gates whose output at any time is a function only of the input at that time

The appearance of the input is followed almost immediately by the appearance of the output, with only gate delays

Consists of *n* binary inputs and *m* binary outputs

Can be defined in three ways:

- Truth table
  - For each of the $2^n$ possible combinations of input signals, the binary value of each of the *m* output signals is listed
- Graphical symbols
  - The interconnected layout of gates is depicted
- Boolean equations
  - Each output signal is expressed as a Boolean function of its input signals

© 2016 Pearson Education, Inc., Hoboken, NJ. All rights reserved.

# Table 11.3
# A Boolean Function of Three Variables

| A | B | C | F |
|---|---|---|---|
| 0 | 0 | 0 | 0 |
| 0 | 0 | 1 | 0 |
| 0 | 1 | 0 | 1 |
| 0 | 1 | 1 | 1 |
| 1 | 0 | 0 | 0 |
| 1 | 0 | 1 | 0 |
| 1 | 1 | 0 | 1 |
| 1 | 1 | 1 | 0 |

© 2016 Pearson Education, Inc., Hoboken, NJ. All rights reserved.

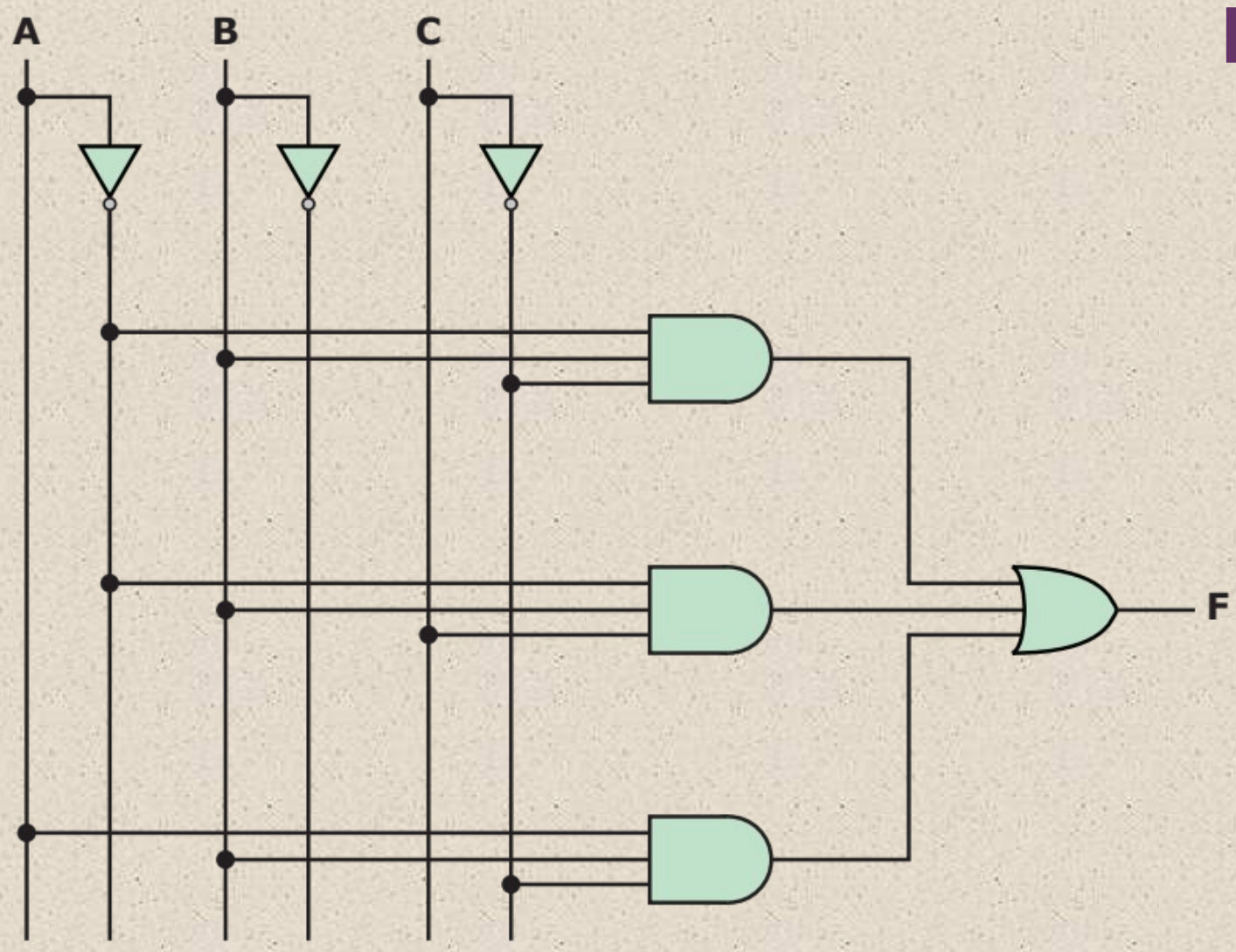


**Figure 11.4 Sum-of-Products Implementation of Table 11.3**

© 2016 Pearson Education, Inc., Hoboken, NJ. All rights reserved.

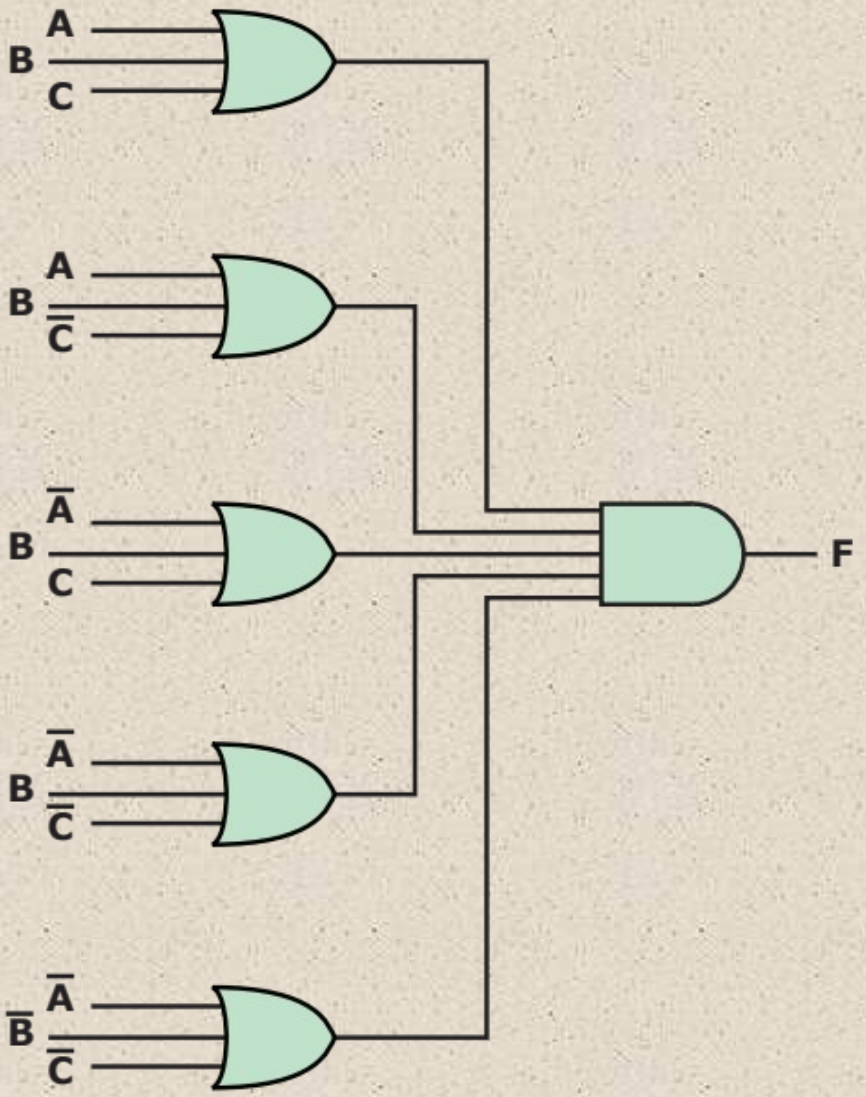


**Figure 11.5 Product-of-Sums Implementation of Table 11.3**

© 2016 Pearson Education, Inc., Hoboken, NJ. All rights reserved.

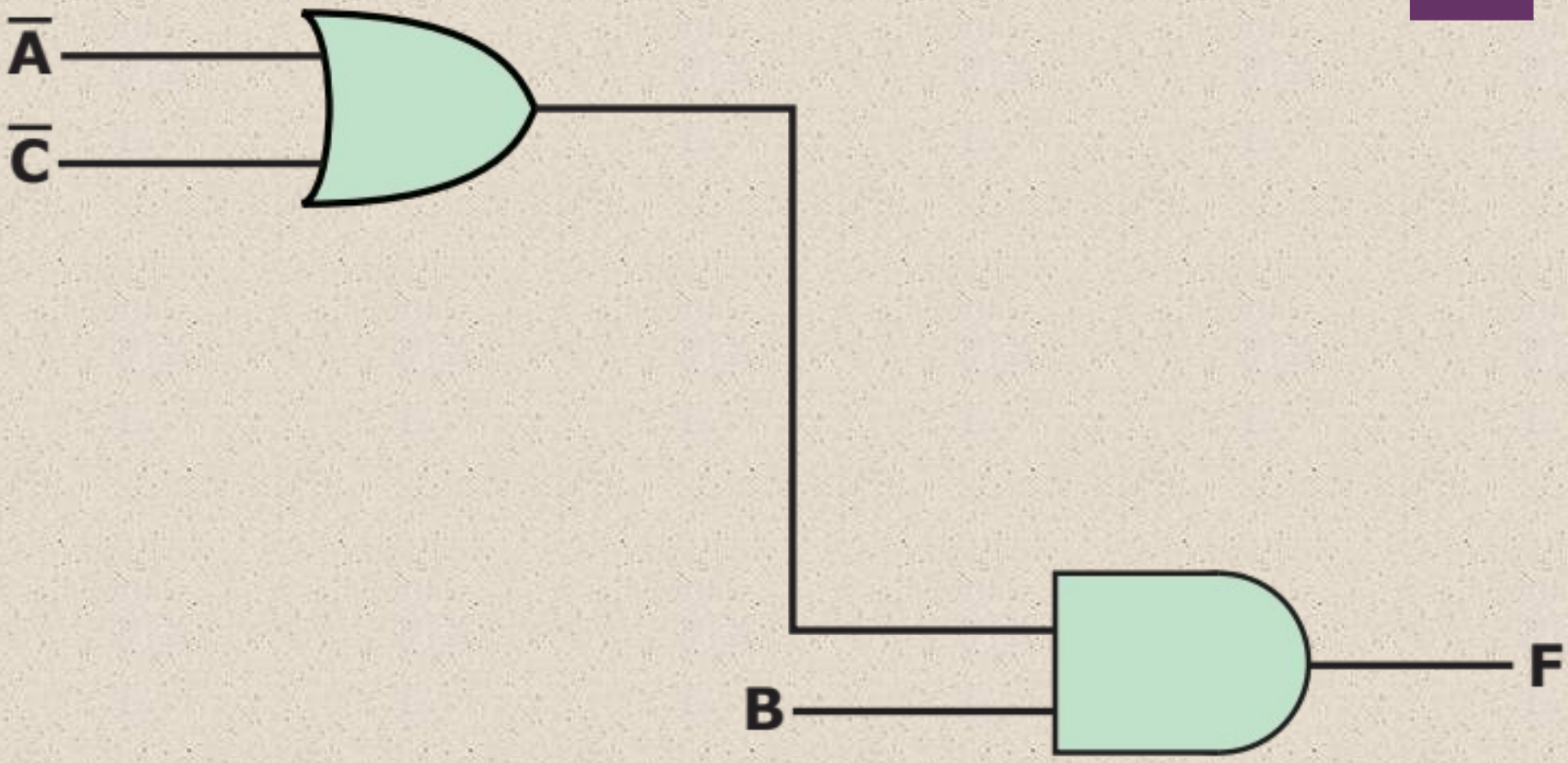


**Figure 11.6 Simplified Implementation of Table 11.3**

© 2016 Pearson Education, Inc., Hoboken, NJ. All rights reserved.

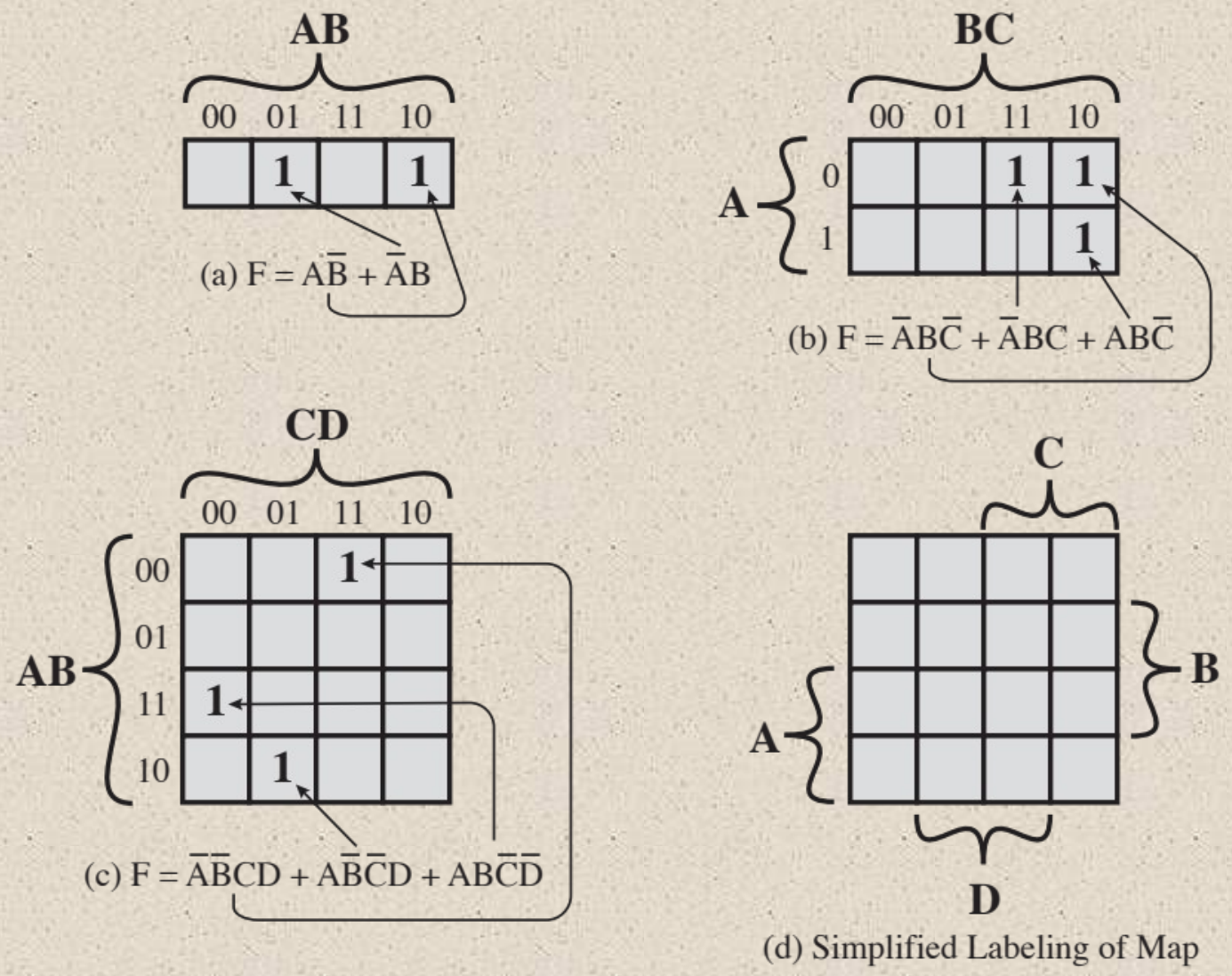


**Figure 11.7 The Use of Karnaugh Maps to Represent Boolean Functions**

© 2016 Pearson Education, Inc., Hoboken, NJ. All rights reserved.

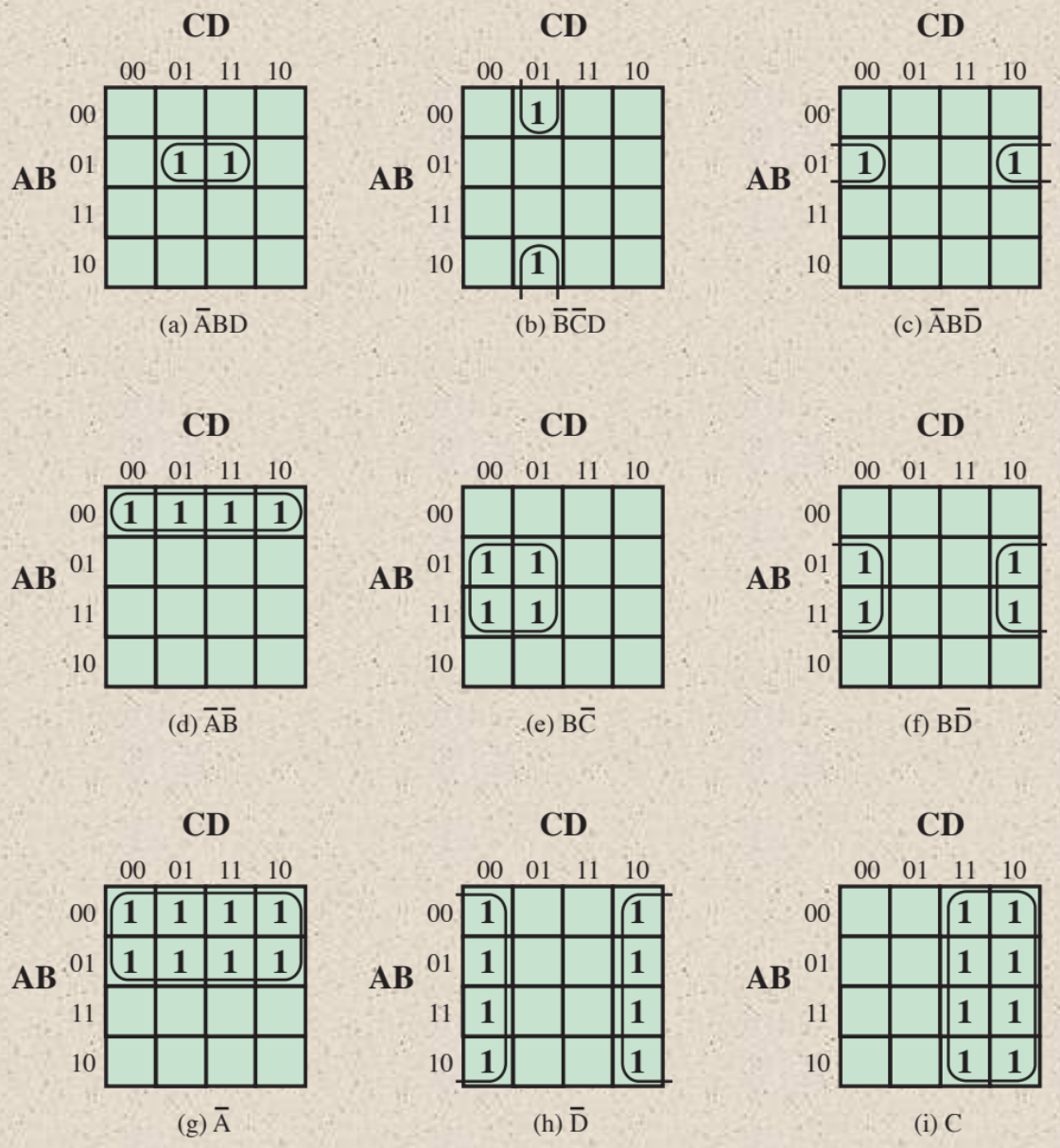


**Figure 11.8 Example Use of Karnaugh Maps**

© 2016 Pearson Education, Inc., Hoboken, NJ. All rights reserved.

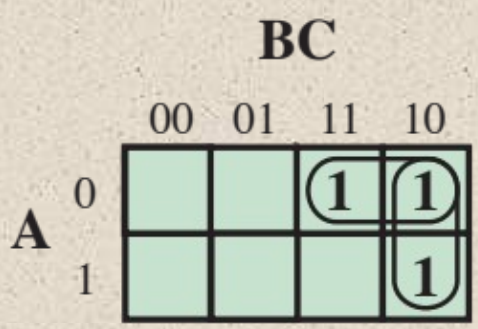


(a) $F = \bar{A}B + B\bar{C}$

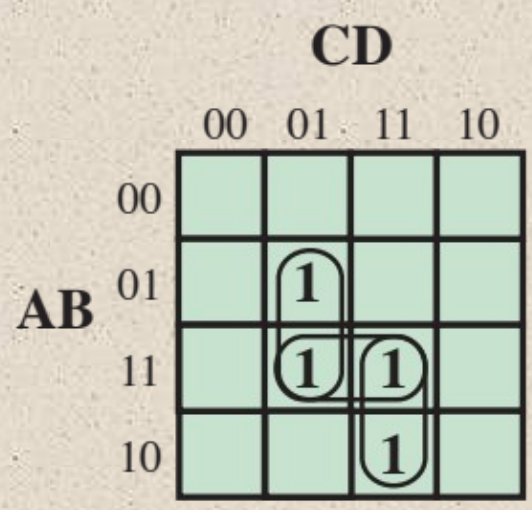


(b) $F = B\bar{C}D + ACD$

**Figure 11.9 Overlapping Groups**

© 2016 Pearson Education, Inc., Hoboken, NJ. All rights reserved.

# Table 11.4
# Truth Table for the One-Digit Packed Decimal Incrementer

| | Input | | | | | Output | | | |
|---|---|---|---|---|---|---|---|---|---|
| Number | A | B | C | D | Number | W | X | Y | Z |
| 0 | 0 | 0 | 0 | 0 | 1 | 0 | 0 | 0 | 1 |
| 1 | 0 | 0 | 0 | 1 | 2 | 0 | 0 | 1 | 0 |
| 2 | 0 | 0 | 1 | 0 | 3 | 0 | 0 | 1 | 1 |
| 3 | 0 | 0 | 1 | 1 | 4 | 0 | 1 | 0 | 0 |
| 4 | 0 | 1 | 0 | 0 | 5 | 0 | 1 | 0 | 1 |
| 5 | 0 | 1 | 0 | 1 | 6 | 0 | 1 | 1 | 0 |
| 6 | 0 | 1 | 1 | 0 | 7 | 0 | 1 | 1 | 1 |
| 7 | 0 | 1 | 1 | 1 | 8 | 1 | 0 | 0 | 0 |
| 8 | 1 | 0 | 0 | 0 | 9 | 1 | 0 | 0 | 1 |
| 9 | 1 | 0 | 0 | 1 | 0 | 0 | 0 | 0 | 0 |
| Don't care condition | 1 | 0 | 1 | 0 | | d | d | d | d |
| | 1 | 0 | 1 | 1 | | d | d | d | d |
| | 1 | 1 | 0 | 0 | | d | d | d | d |
| | 1 | 1 | 0 | 1 | | d | d | d | d |
| | 1 | 1 | 1 | 0 | | d | d | d | d |
| | 1 | 1 | 1 | 1 | | d | d | d | d |

Table 11.4 Truth Table for the One-Digit Packed Decimal Incrementer

© 2016 Pearson Education, Inc., Hoboken, NJ. All rights reserved.

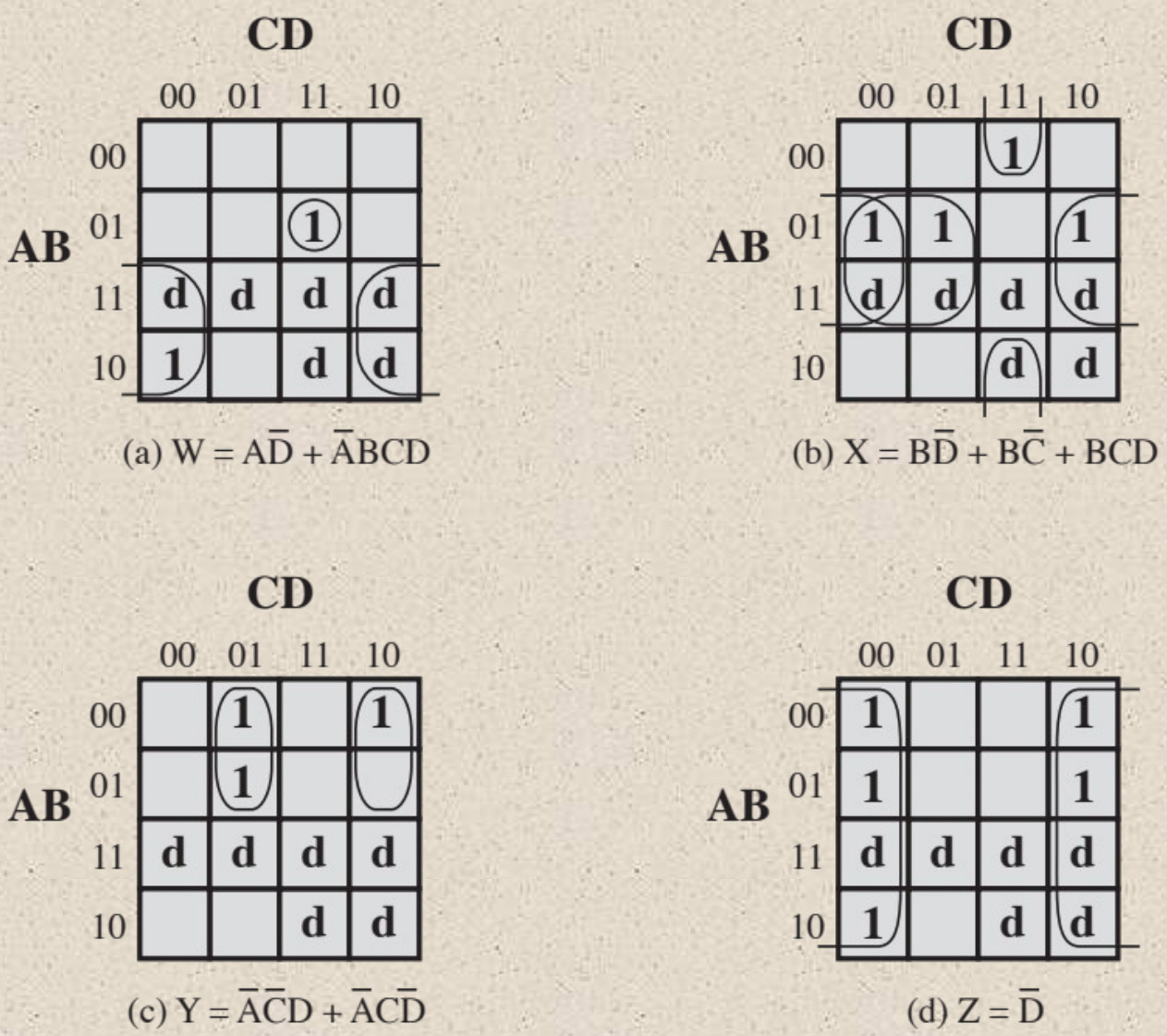


**Figure 11.10 Karnaugh Maps for the Incrementer**

© 2016 Pearson Education, Inc., Hoboken, NJ. All rights reserved.

# Table 11.5
## First Stage of Quine-McCluskey Method

(for F = ABCD + AB D + AB  + A CD + BCD + BC  + B D + D)

| Product Term | Index | A | B | C | D | |
|---|---|---|---|---|---|---|
| $\bar{A}\bar{B}\bar{C}D$ | 1 | 0 | 0 | 0 | 1 | ✓ |
| $\bar{A}B\bar{C}D$ | 5 | 0 | 1 | 0 | 1 | ✓ |
| $\bar{A}BC\bar{D}$ | 6 | 0 | 1 | 1 | 0 | ✓ |
| $AB\bar{C}\bar{D}$ | 12 | 1 | 1 | 0 | 0 | ✓ |
| $\bar{A}BCD$ | 7 | 0 | 1 | 1 | 1 | ✓ |
| $A\bar{B}CD$ | 11 | 1 | 0 | 1 | 1 | ✓ |
| $AB\bar{C}D$ | 13 | 1 | 1 | 0 | 1 | ✓ |
| $ABCD$ | 15 | 1 | 1 | 1 | 1 | ✓ |

© 2016 Pearson Education, Inc., Hoboken, NJ. All rights reserved.

# Table 11.6
# Last Stage of Quine-McCluskey Method

(for F = ABCD + AB D + AB  + A CD + BCD + BC  + B D + D)

| | $ABCD$ | $AB\bar{C}D$ | $AB\bar{C}\bar{D}$ | $A\bar{B}CD$ | $\bar{A}BCD$ | $\bar{A}BC\bar{D}$ | $\bar{A}B\bar{C}D$ | [illegible]D |
|---|---|---|---|---|---|---|---|---|
| $BD$ | X | X | | | X | | X | |
| $\bar{A}\bar{C}D$ | | | | | | | $\boxed{X}$ | $\otimes$ |
| $\bar{A}BC$ | | | | | $\boxed{X}$ | $\otimes$ | | |
| $AB\bar{C}$ | | $\boxed{X}$ | $\otimes$ | | | | | |
| $ACD$ | $\boxed{X}$ | | | $\otimes$ | | | | |

© 2016 Pearson Education, Inc., Hoboken, NJ. All rights reserved.

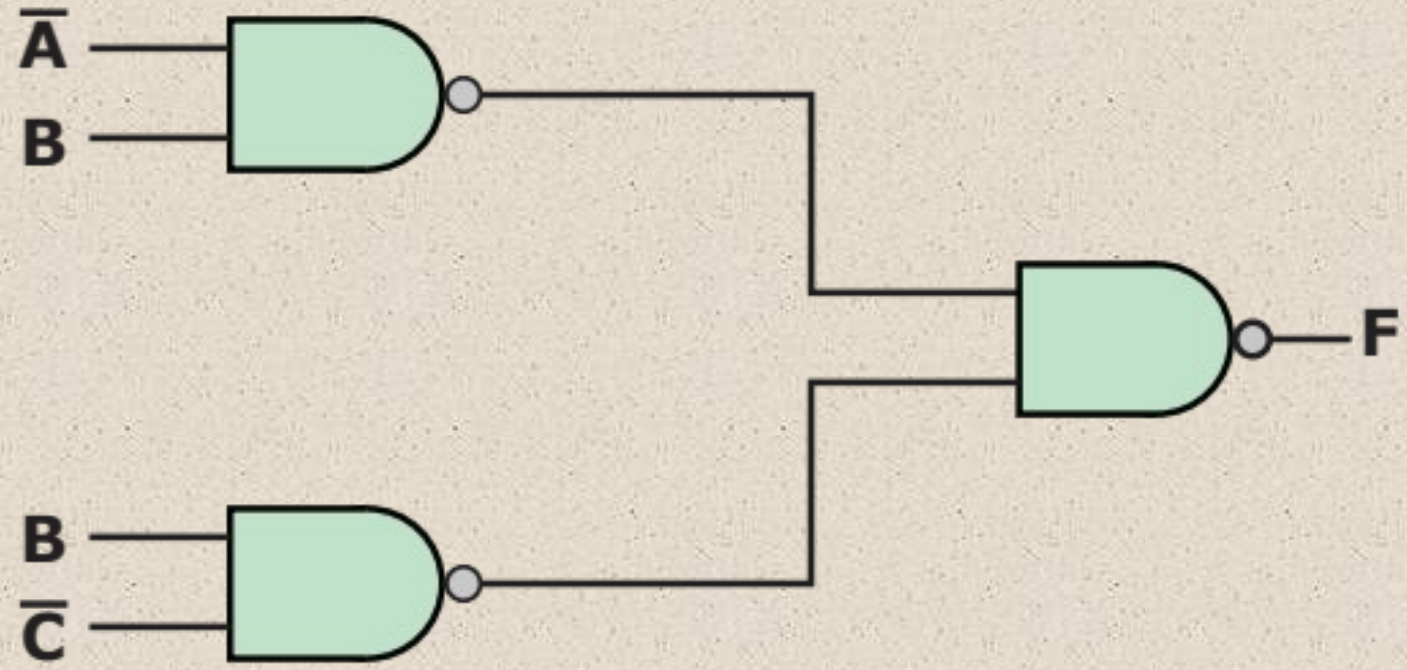


**Figure 11.11 NAND Implementation of Table 11.3**

© 2016 Pearson Education, Inc., Hoboken, NJ. All rights reserved.

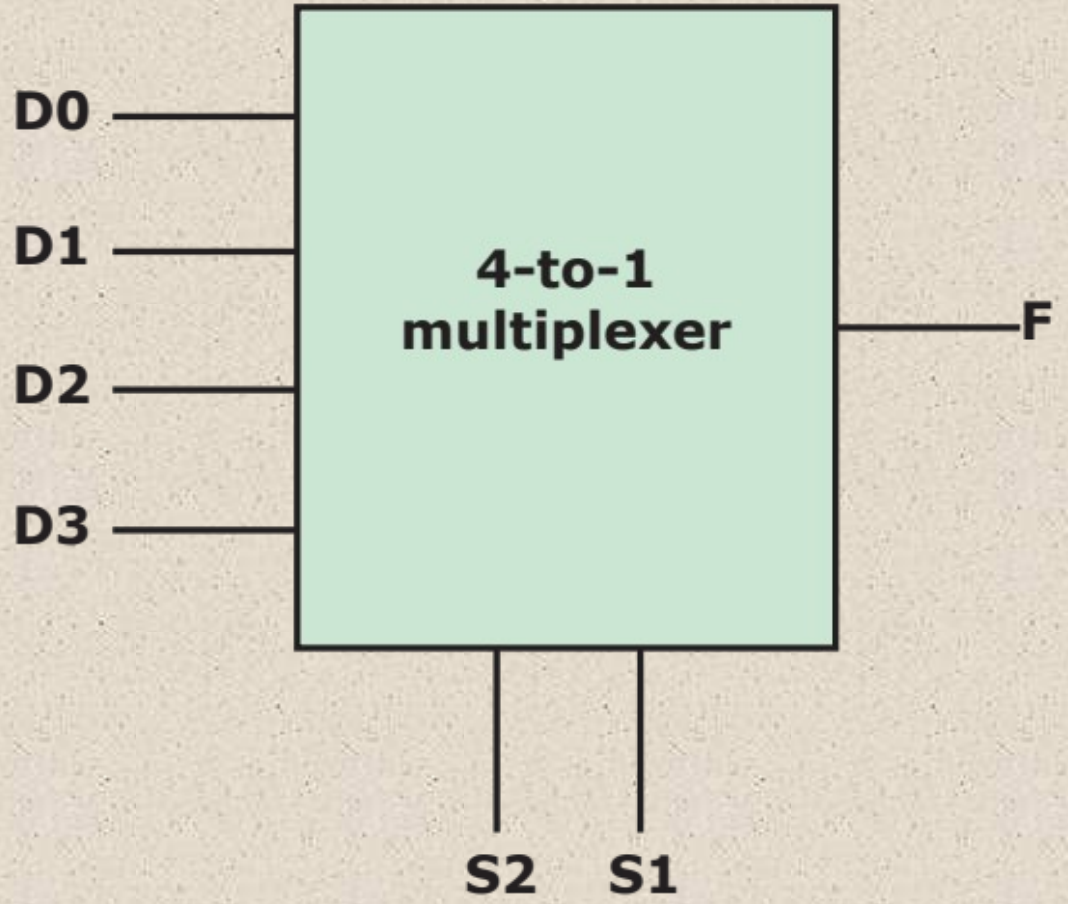


**Figure 11.12 4-to-1 Multiplexer Representation**

© 2016 Pearson Education, Inc., Hoboken, NJ. All rights reserved.

# Table 11.7
# 4-to-1 Multiplexer Truth Table

| S2 | S1 | F |
|---|---|---|
| 0 | 0 | D0 |
| 0 | 1 | D1 |
| 1 | 0 | D2 |
| 1 | 1 | D3 |

© 2016 Pearson Education, Inc., Hoboken, NJ. All rights reserved.

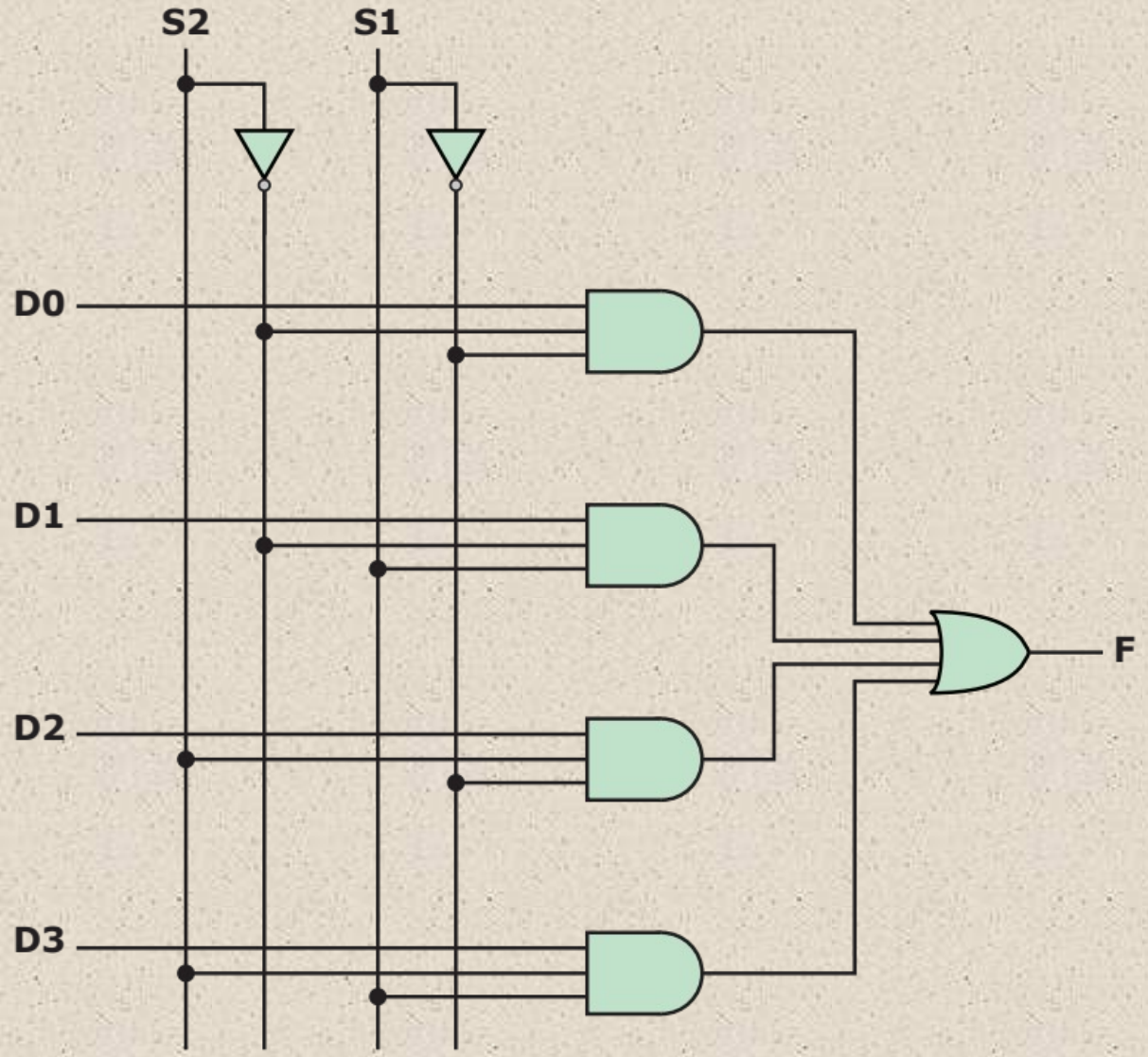


**Figure 11.13 Multiplexer Implementation**

© 2016 Pearson Education, Inc., Hoboken, NJ. All rights reserved.

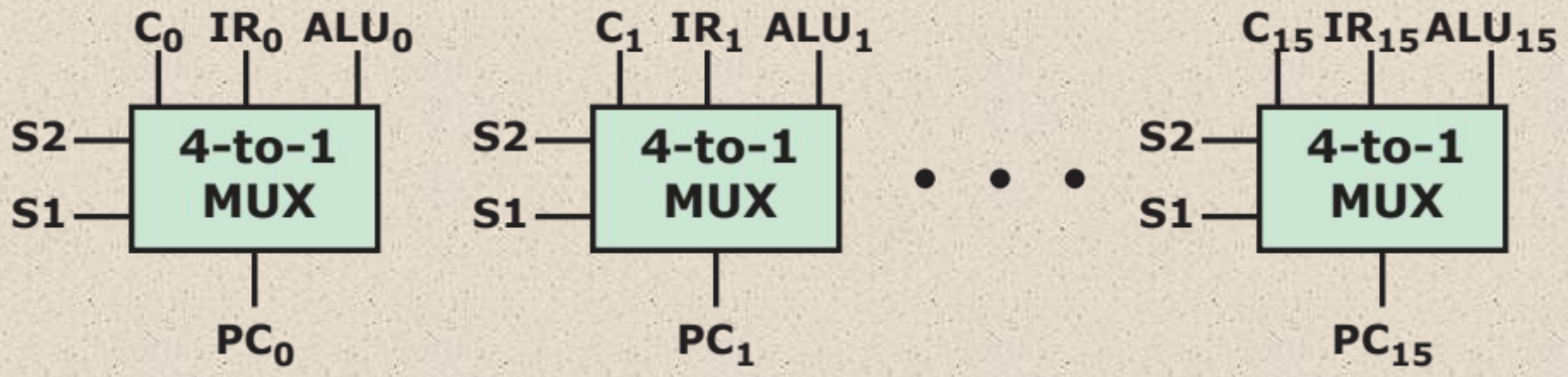


**Figure 11.14 Multiplexer Input to Program Counter**

© 2016 Pearson Education, Inc., Hoboken, NJ. All rights reserved.

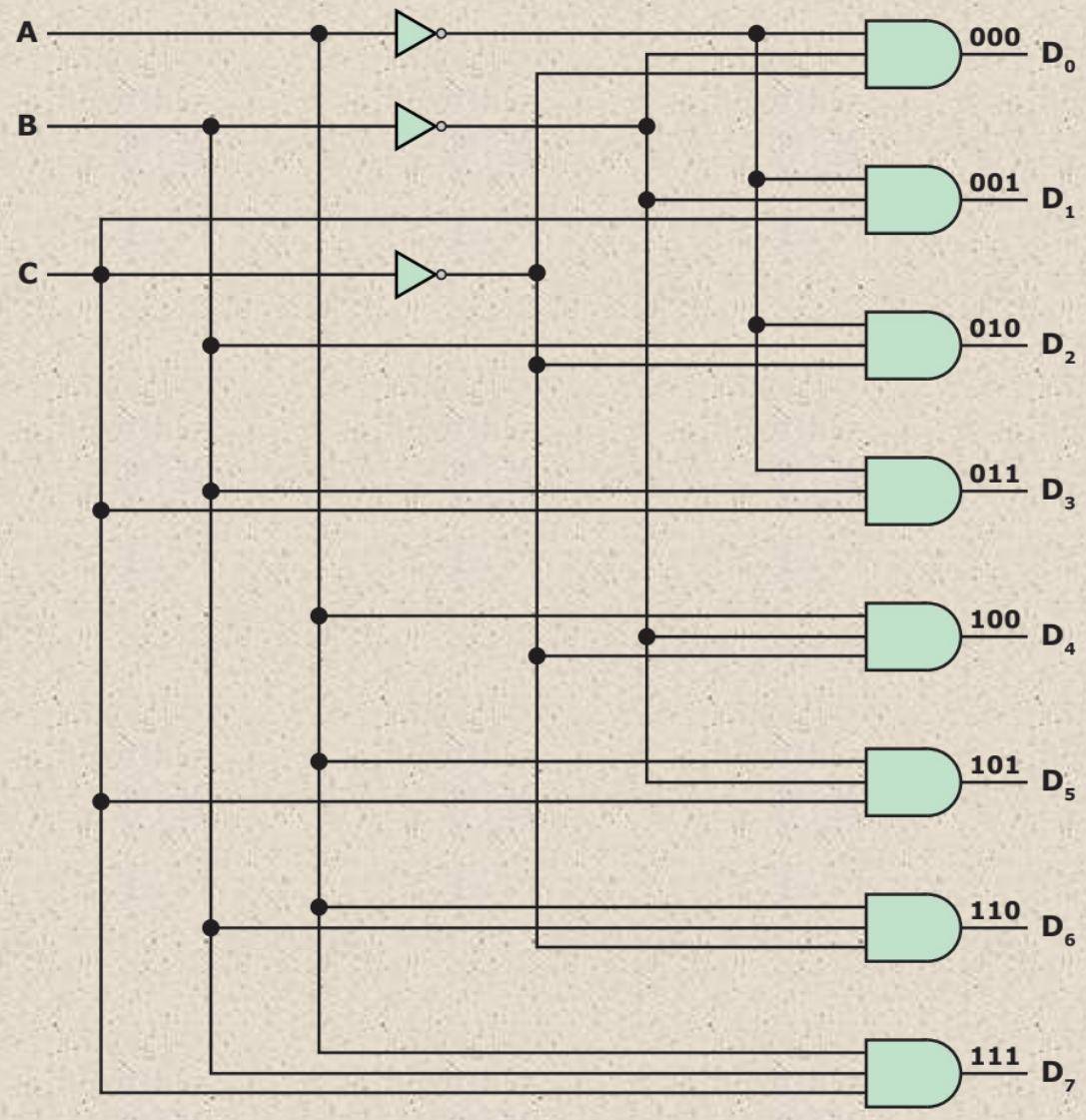


**Figure 11.15 Decoder with 3 Inputs and $2^3 = 8$ Outputs**

© 2016 Pearson Education, Inc., Hoboken, NJ. All rights reserved.

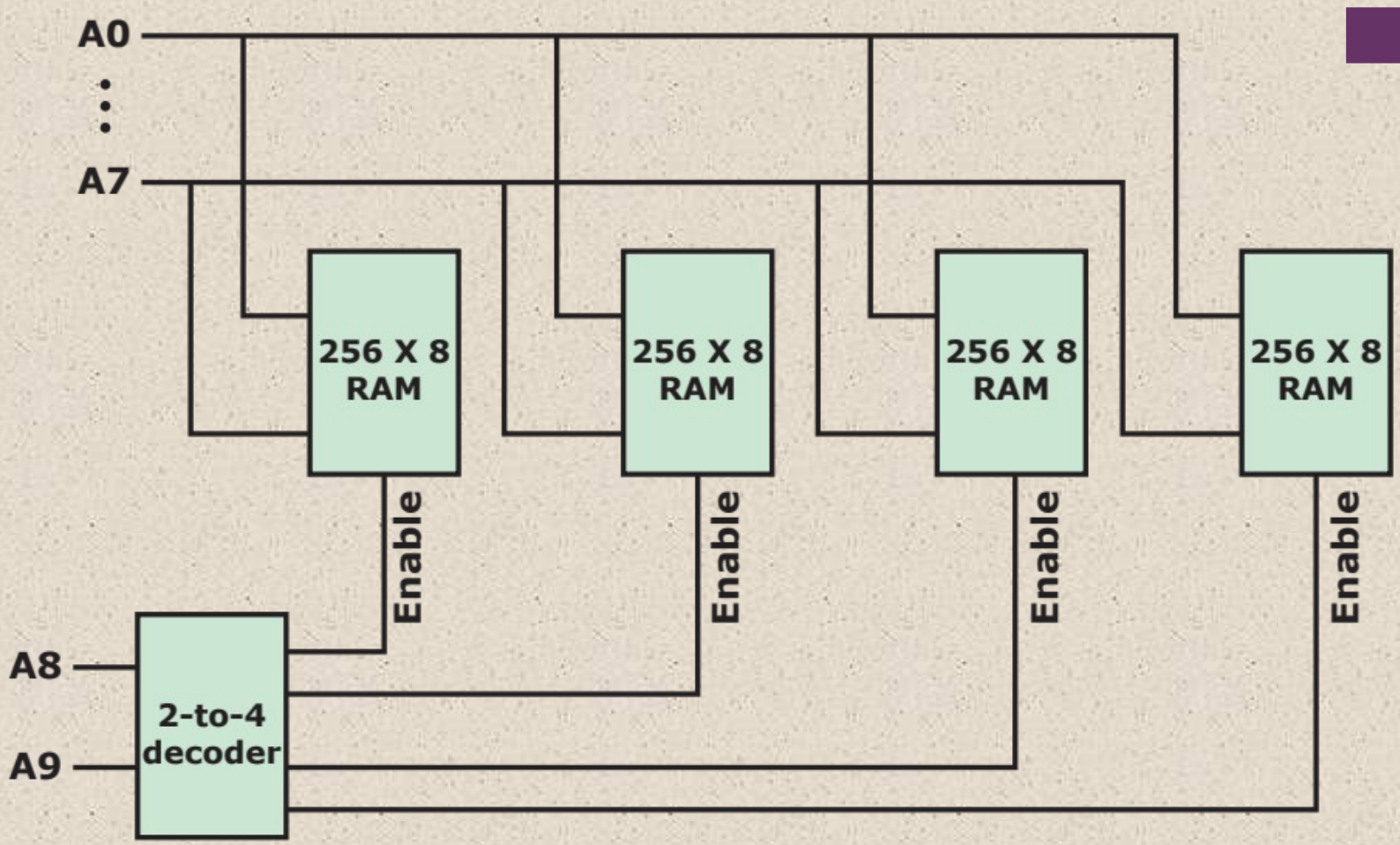


**Figure 11.16 Address Decoding**

© 2016 Pearson Education, Inc., Hoboken, NJ. All rights reserved.

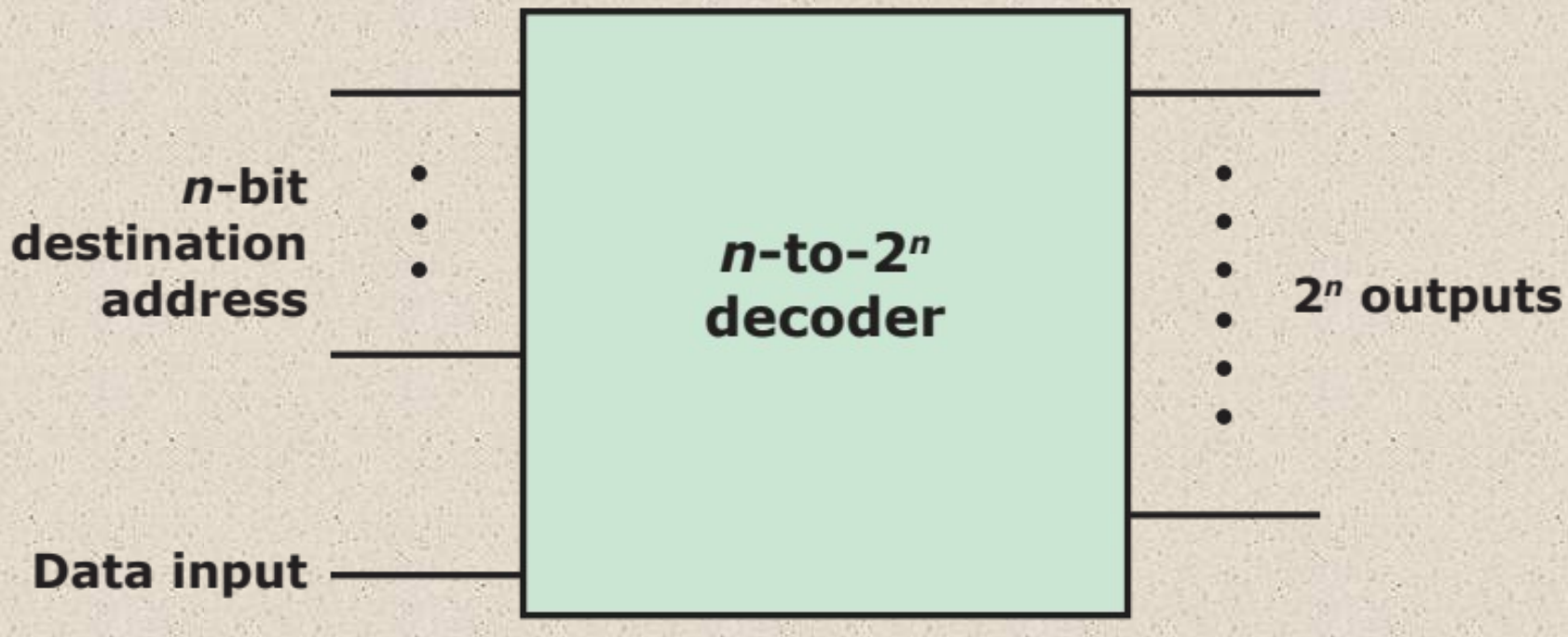


**Figure 11.17 Implementation of a Demultiplexer Using a Decoder**

© 2016 Pearson Education, Inc., Hoboken, NJ. All rights reserved.

# Read-Only Memory (ROM)

- Memory that is implemented with combinational circuits
  - Combinational circuits are often referred to as “memoryless” circuits because their output depends only on their current input and no history of prior inputs is retained
- Memory unit that performs only the read operation
  - Binary information stored in a ROM is permanent and is created during the fabrication process
  - A given input to the ROM (address lines) always produces the same output (data lines)
  - Because the outputs are a function only of the present inputs, ROM is a combinational circuit

© 2016 Pearson Education, Inc., Hoboken, NJ. All rights reserved.

# Table 11.8
# Truth Table for a ROM

| Input | | | | Output | | | |
|---|---|---|---|---|---|---|---|
| $X_1$ | $X_2$ | $X_3$ | $X_4$ | $Z_1$ | $Z_2$ | $Z_3$ | $Z_4$ |
| 0 | 0 | 0 | 0 | 0 | 0 | 0 | 0 |
| 0 | 0 | 0 | 1 | 0 | 0 | 0 | 1 |
| 0 | 0 | 1 | 0 | 0 | 0 | 1 | 1 |
| 0 | 0 | 1 | 1 | 0 | 0 | 1 | 0 |
| 0 | 1 | 0 | 0 | 0 | 1 | 1 | 0 |
| 0 | 1 | 0 | 1 | 0 | 1 | 1 | 1 |
| 0 | 1 | 1 | 0 | 0 | 1 | 0 | 1 |
| 0 | 1 | 1 | 1 | 0 | 1 | 0 | 0 |
| 1 | 0 | 0 | 0 | 1 | 1 | 0 | 0 |
| 1 | 0 | 0 | 1 | 1 | 1 | 0 | 1 |
| 1 | 0 | 1 | 0 | 1 | 1 | 1 | 1 |
| 1 | 0 | 1 | 1 | 1 | 1 | 1 | 0 |
| 1 | 1 | 0 | 0 | 1 | 0 | 1 | 0 |
| 1 | 1 | 0 | 1 | 1 | 0 | 1 | 1 |
| 1 | 1 | 1 | 0 | 1 | 0 | 0 | 1 |
| 1 | 1 | 1 | 1 | 1 | 0 | 0 | 0 |

© 2016 Pearson Education, Inc., Hoboken, NJ. All rights reserved.

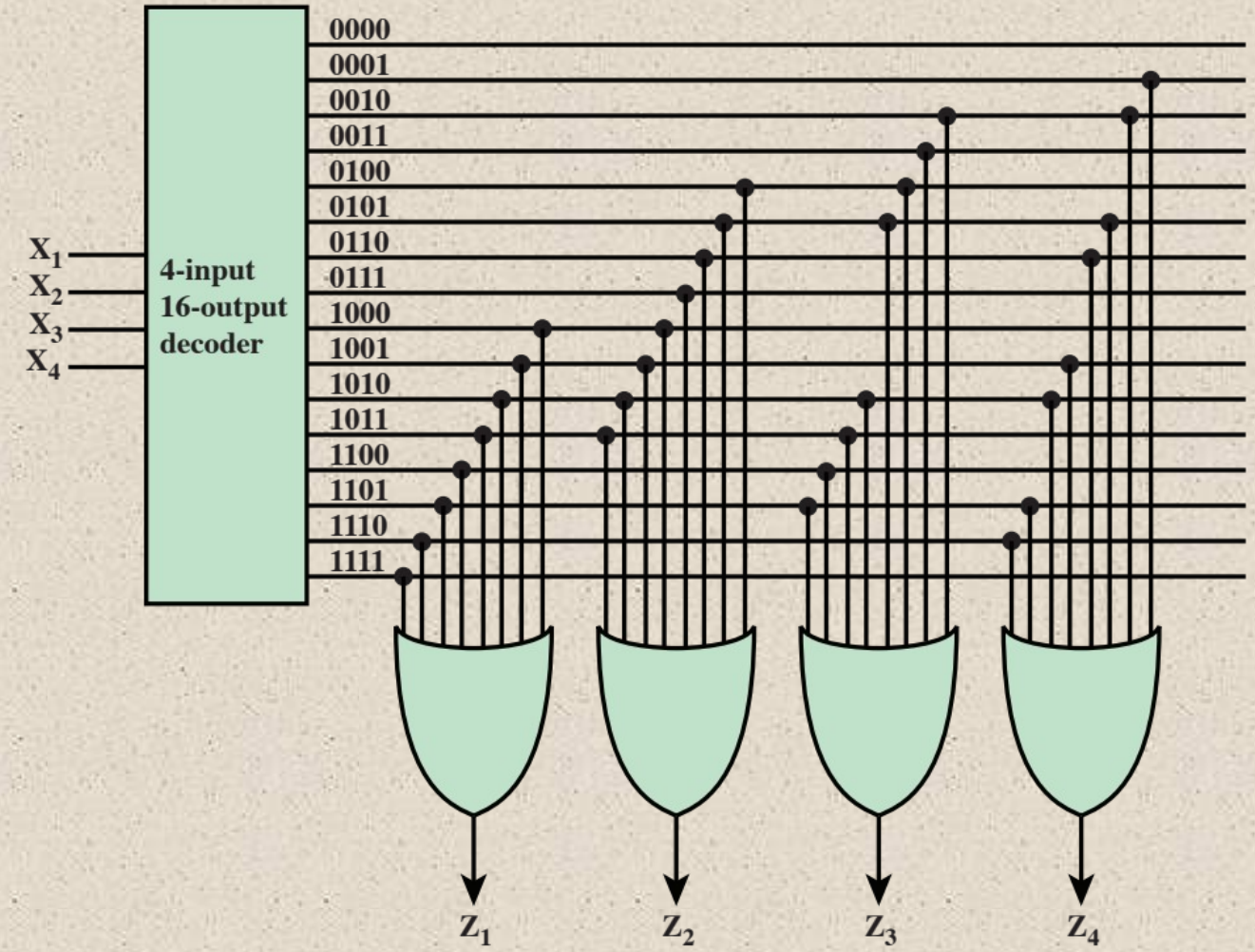


**Figure 11.18 A 64-Bit ROM**

© 2016 Pearson Education, Inc., Hoboken, NJ. All rights reserved.

# Table 11.9
# Binary Addition Truth Tables

(a) Single-Bit Addition

| A | B | Sum | Carry |
|---|---|---|---|
| 0 | 0 | 0 | 0 |
| 0 | 1 | 1 | 0 |
| 1 | 0 | 1 | 0 |
| 1 | 1 | 0 | 1 |

(b) Addition with Carry Input

| $C_{in}$ | A | B | Sum | $C_{out}$ |
|---|---|---|---|---|
| 0 | 0 | 0 | 0 | 0 |
| 0 | 0 | 1 | 1 | 0 |
| 0 | 1 | 0 | 1 | 0 |
| 0 | 1 | 1 | 0 | 1 |
| 1 | 0 | 0 | 1 | 0 |
| 1 | 0 | 1 | 0 | 1 |
| 1 | 1 | 0 | 0 | 1 |
| 1 | 1 | 1 | 1 | 1 |

© 2016 Pearson Education, Inc., Hoboken, NJ. All rights reserved.

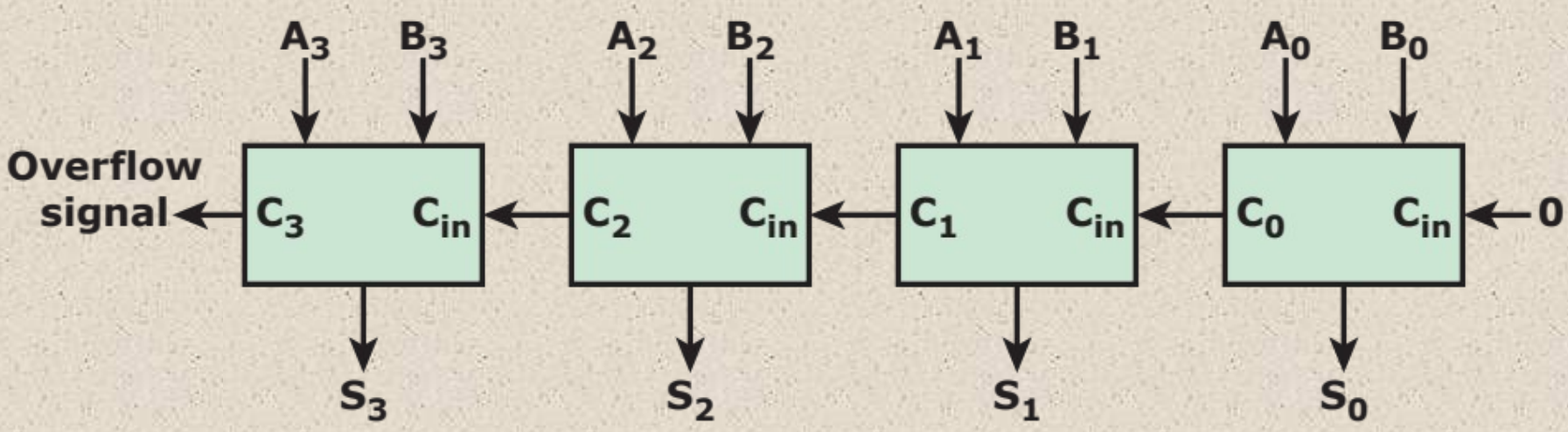


**Figure 11.19 4-Bit Adder**

© 2016 Pearson Education, Inc., Hoboken, NJ. All rights reserved.

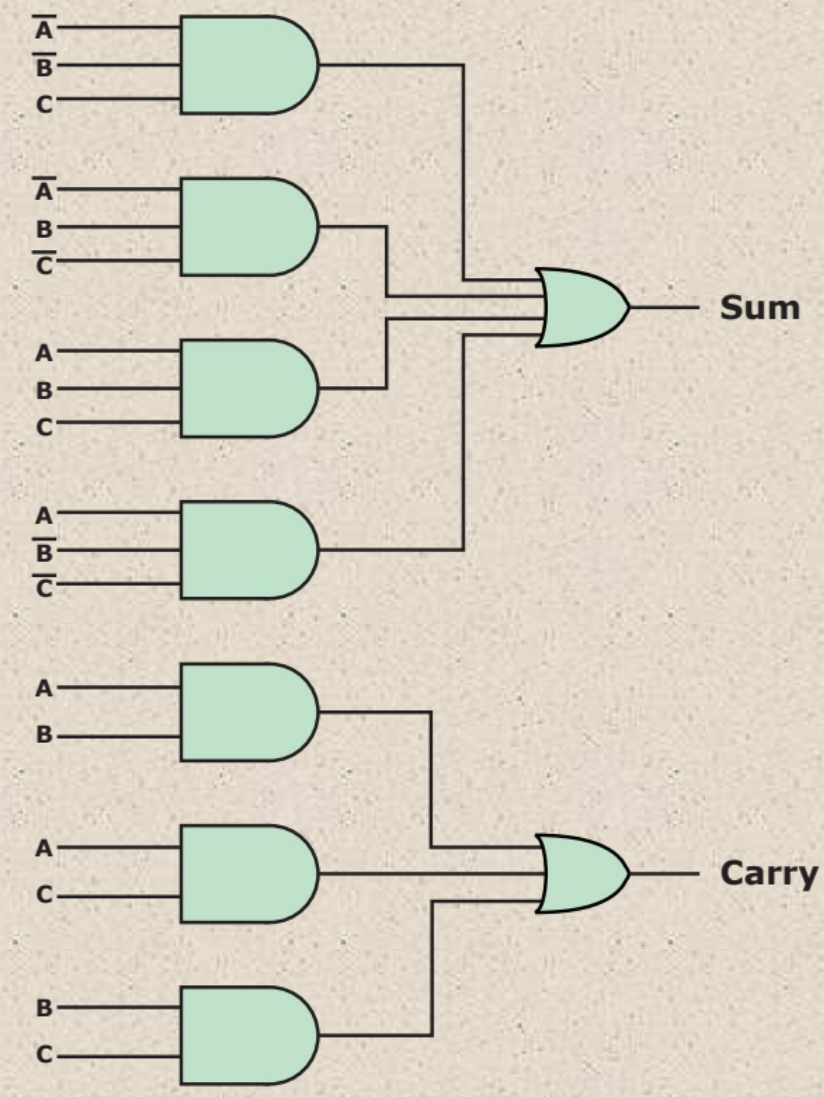


**Figure 11.20 Implementation of an Adder**

© 2016 Pearson Education, Inc., Hoboken, NJ. All rights reserved.

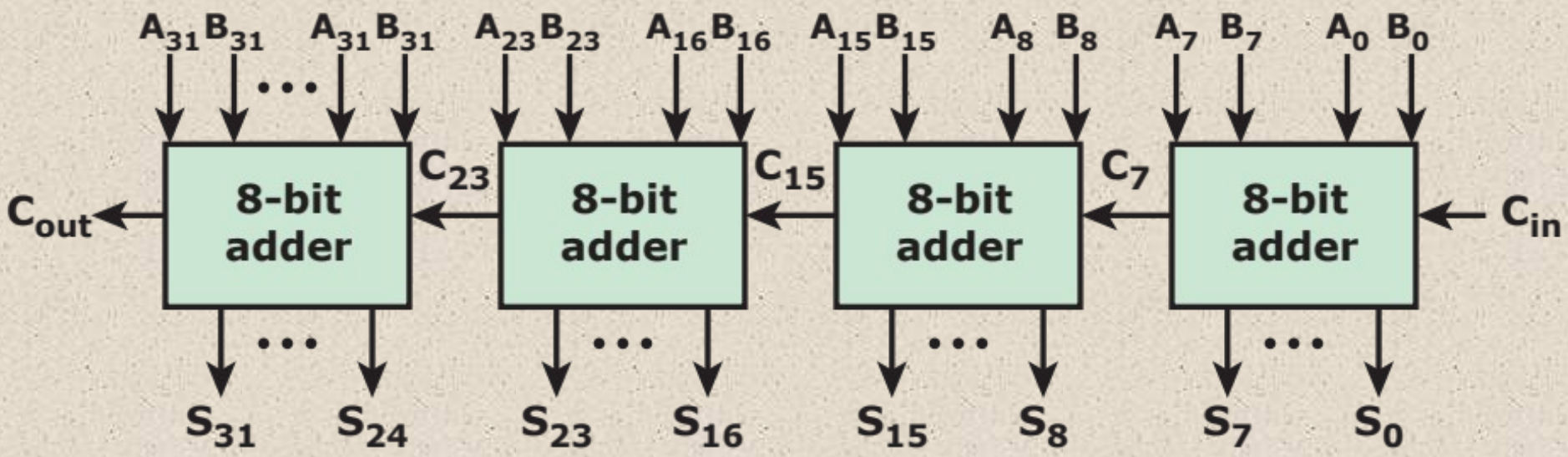


**Figure 11.21 Construction of a 32-Bit Adder Using 8-Bit Adders**

© 2016 Pearson Education, Inc., Hoboken, NJ. All rights reserved.

# Sequential Circuit

Sequential

Circuit

Current output depends not only on the current input, but also on the past history of inputs

Makes use of combinational circuits

© 2016 Pearson Education, Inc., Hoboken, NJ. All rights reserved.

# Flip-Flops

- Simplest form of sequential circuit
- There are a variety of flip-flops, all of which share two properties:

  1. The flip-flop is a bistable device. It exists in one of two states and, in the absence of input, remains in that state. Thus, the flip-flop can function as a 1-bit memory.
  2. The flip-flop has two outputs, which are always the complements of each other.

© 2016 Pearson Education, Inc., Hoboken, NJ. All rights reserved.

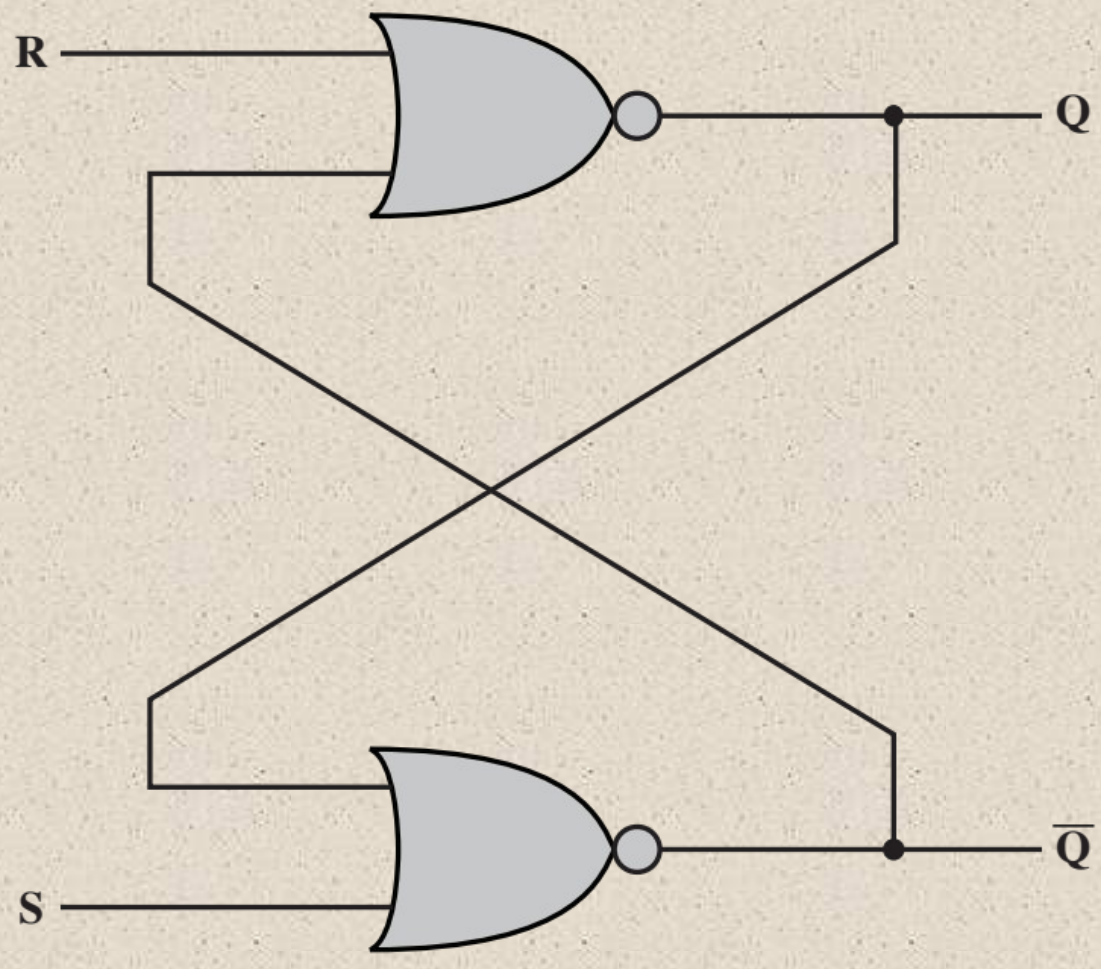


**Figure 11.22 The S-R Latch Implemented with NOR Gates**

© 2016 Pearson Education, Inc., Hoboken, NJ. All rights reserved.

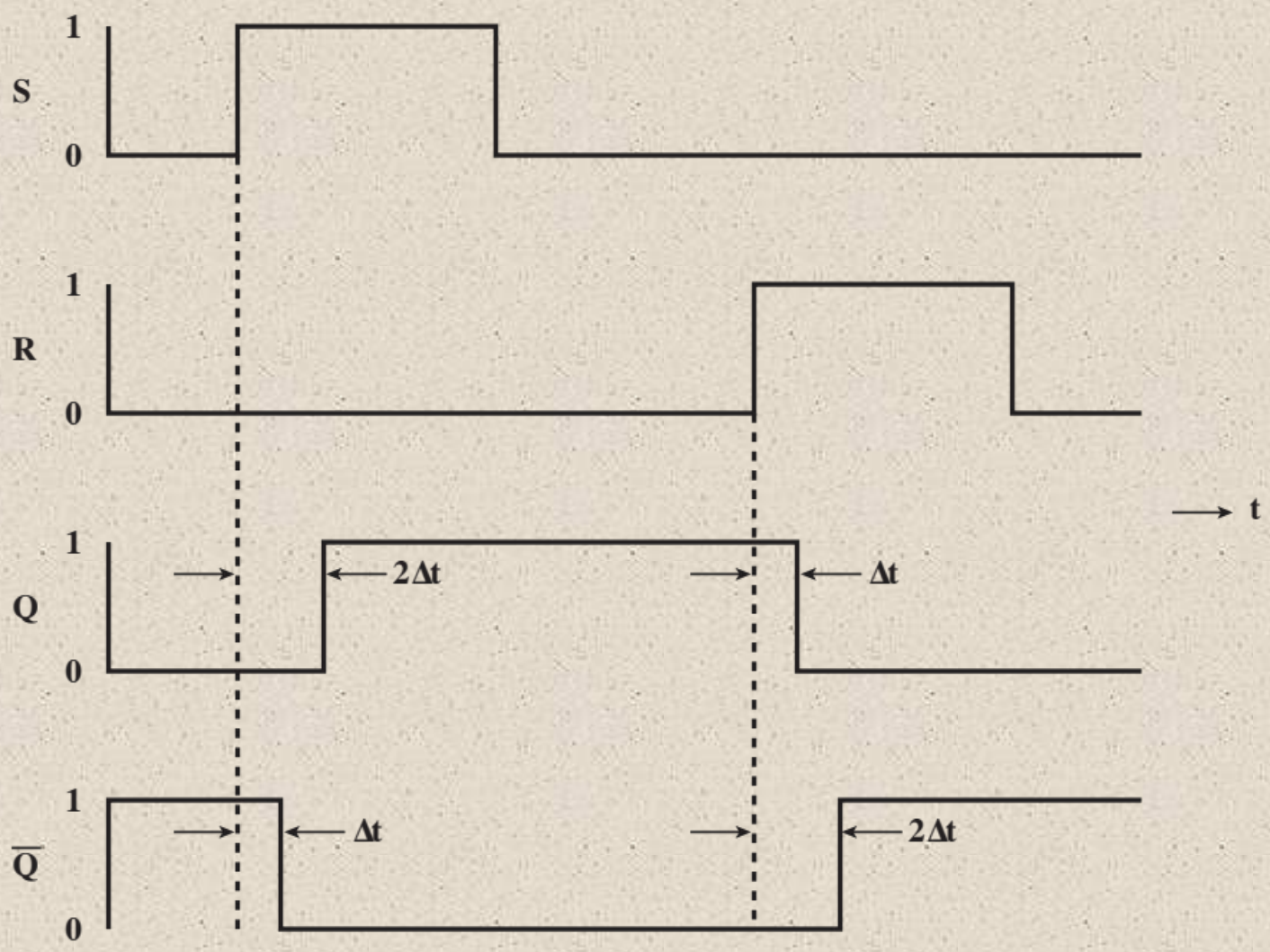


**Figure 11.23 NOR S-R Latch Timing Diagram**

© 2016 Pearson Education, Inc., Hoboken, NJ. All rights reserved.

# Table 11.10 The S-R Latch

(a) Characteristic Table

| Current Inputs SR | Current State $Q_n$ | Next State $Q_{n+1}$ |
|---|---|---|
| 00 | 0 | 0 |
| 00 | 1 | 1 |
| 01 | 0 | 0 |
| 01 | 1 | 0 |
| 10 | 0 | 1 |
| 10 | 1 | 1 |
| 11 | 0 | — |
| 11 | 1 | — |

(b) Simplified Characteristic Table

| S | R | $Q_{n+1}$ |
|---|---|---|
| 0 | 0 | $Q_n$ |
| 0 | 1 | 0 |
| 1 | 0 | 1 |
| 1 | 1 | — |

(c) Response to Series of Inputs

| $t$ | 0 | 1 | 2 | 3 | 4 | 5 | 6 | 7 | 8 | 9 |
|---|---|---|---|---|---|---|---|---|---|---|
| S | 1 | 0 | 0 | 0 | 0 | 0 | 0 | 0 | 1 | 0 |
| R | 0 | 0 | 0 | 1 | 0 | 0 | 1 | 0 | 0 | 0 |
| $Q_{n+1}$ | 1 | 1 | 1 | 0 | 0 | 0 | 0 | 0 | 1 | 1 |

© 2016 Pearson Education, Inc., Hoboken, NJ. All rights reserved.

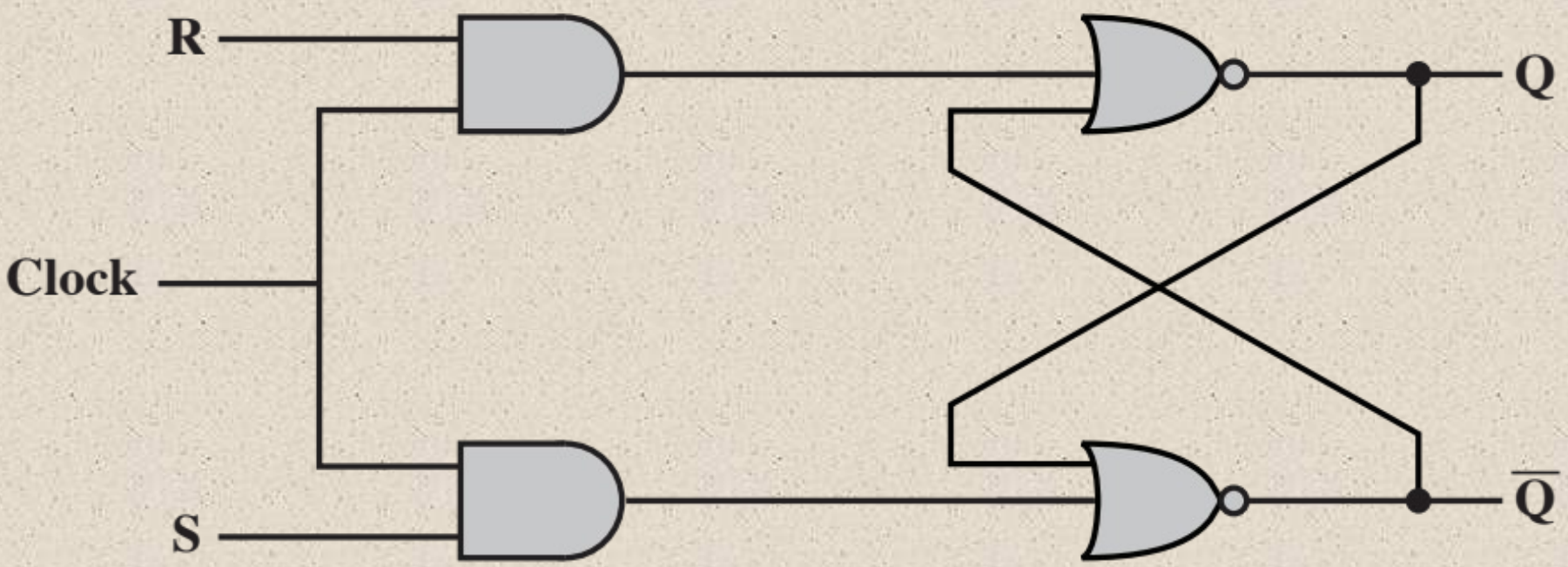


**Figure 11.24 Clocked S-R Flip Flop**

© 2016 Pearson Education, Inc., Hoboken, NJ. All rights reserved.

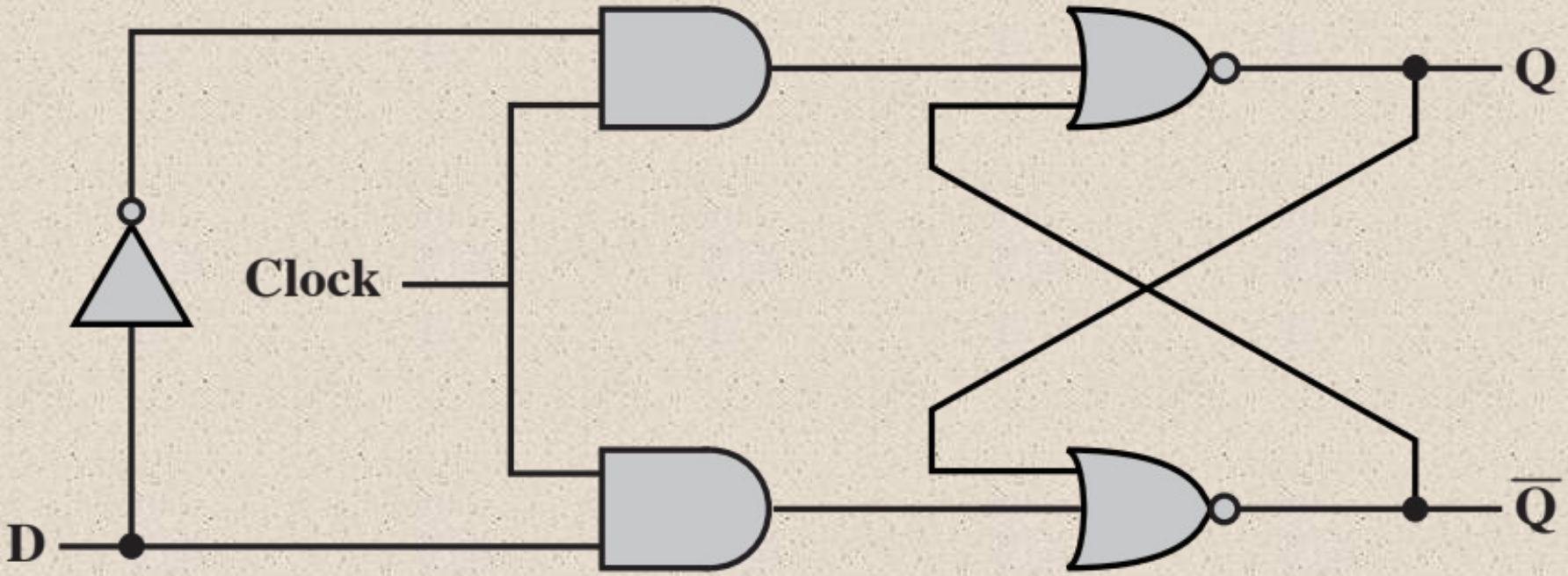


**Figure 11.25 D Flip Flop**

© 2016 Pearson Education, Inc., Hoboken, NJ. All rights reserved.

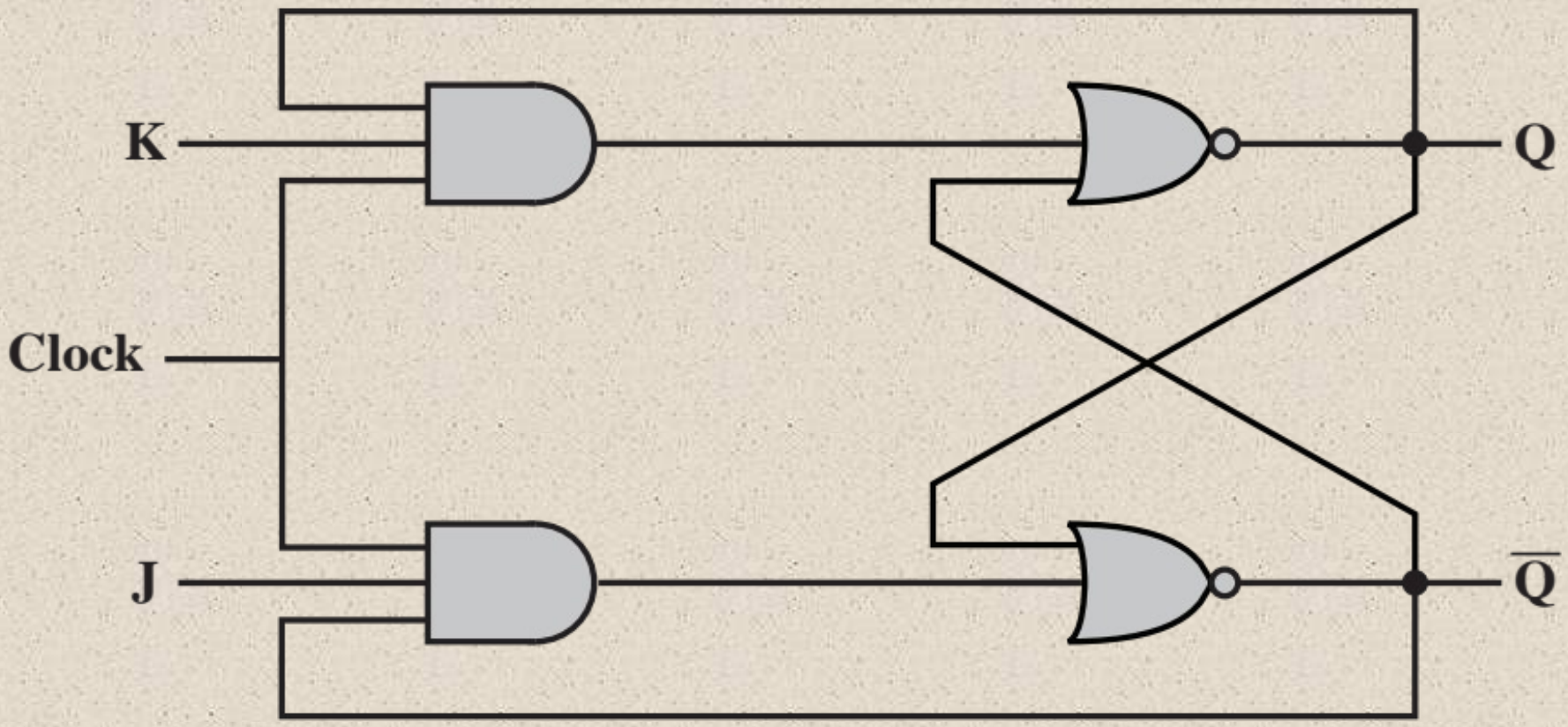


**Figure 11.26 J-K Flip Flop**

© 2016 Pearson Education, Inc., Hoboken, NJ. All rights reserved.

| Name | Graphical Symbol | Truth Table |
|---|---|---|
| **S-R** | 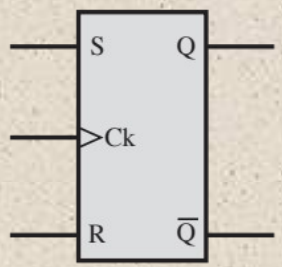 | $S$ $R$ $Q_{n+1}$<br>0 0 $Q_n$<br>0 1 0<br>1 0 1<br>1 1 – |
| **J-K** | 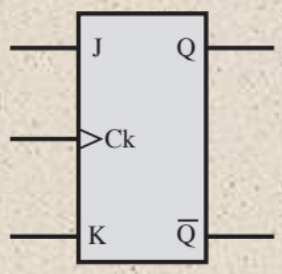 | $J$ $K$ $Q_{n+1}$<br>0 0 $Q_n$<br>0 1 0<br>1 0 1<br>1 1 $\overline{Q_n}$ |
| **D** | 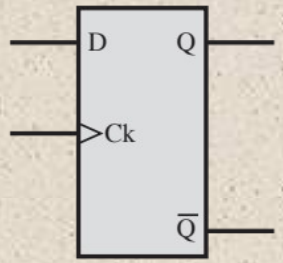 | $D$ $Q_{n+1}$<br>0 0<br>1 1 |

**Figure 11.27 Basic Flip-Flops**

© 2016 Pearson Education, Inc., Hoboken, NJ. All rights reserved.

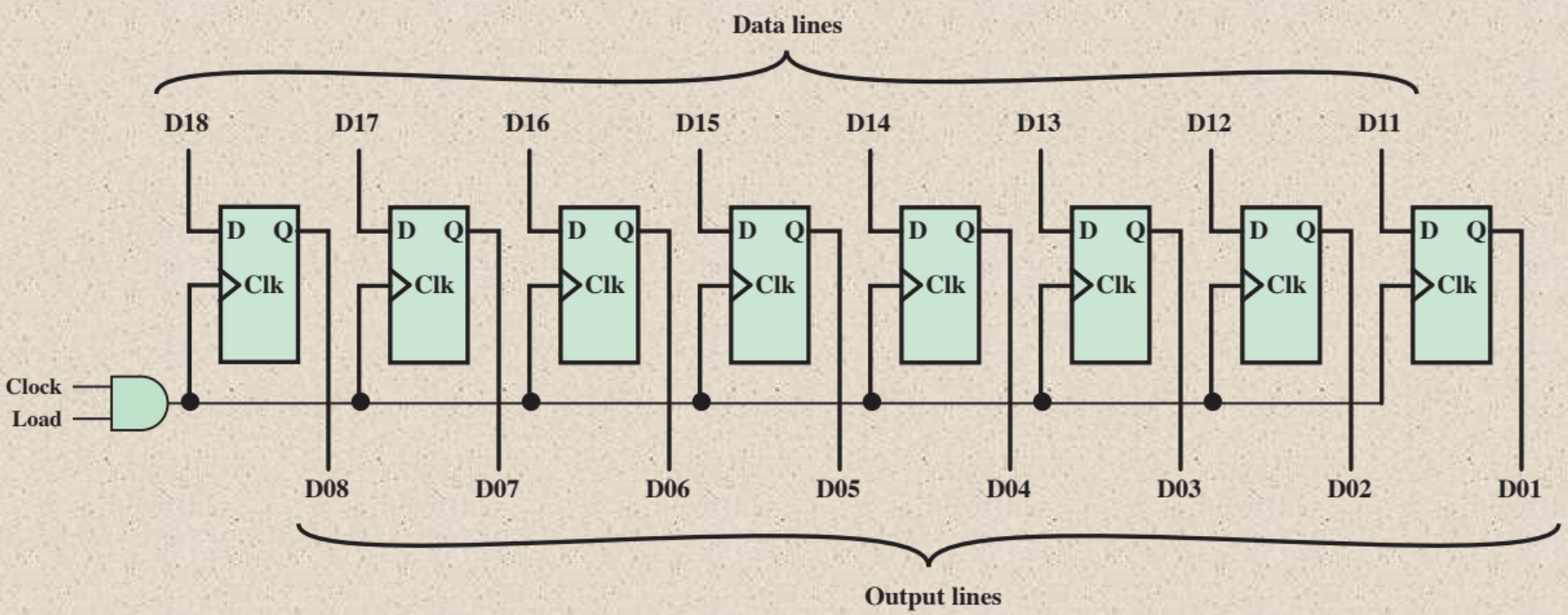


**Figure 11.28 8-Bit Parallel Register**

© 2016 Pearson Education, Inc., Hoboken, NJ. All rights reserved.

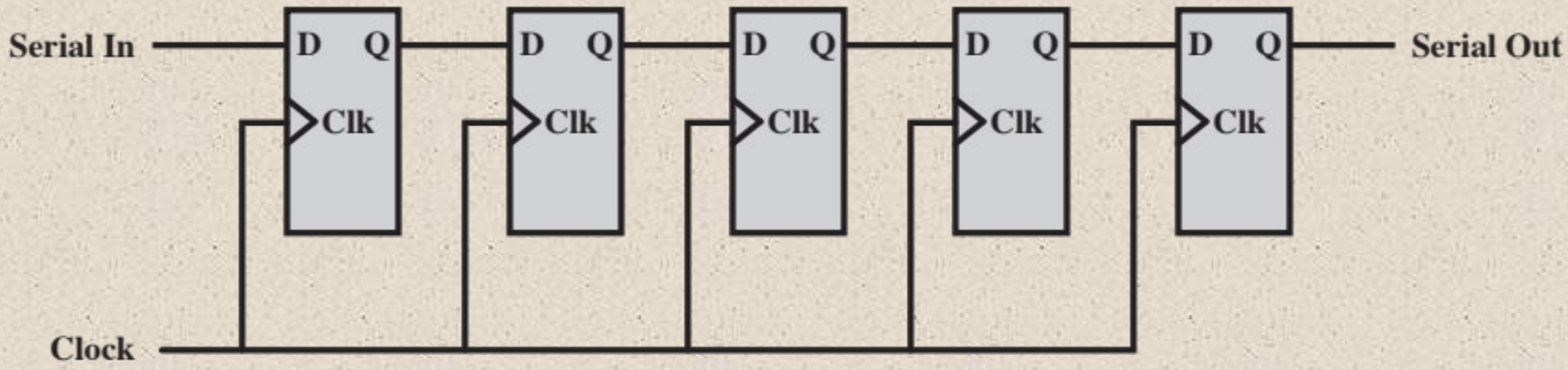


**Figure 11.29 5-Bit Shift Register**

© 2016 Pearson Education, Inc., Hoboken, NJ. All rights reserved.

# Counter

- A register whose value is easily incremented by 1 modulo the capacity of the register
- After the maximum value is achieved the next increment sets the counter value to 0
- An example of a counter in the CPU is the program counter
- Can be designated as:
  - Asynchronous
    - Relatively slow because the output of one flip-flop triggers a change in the status of the next flip-flop
  - Synchronous
    - All of the flip-flops change state at the same time
    - Because it is faster it is the kind used in CPUs

© 2016 Pearson Education, Inc., Hoboken, NJ. All rights reserved.

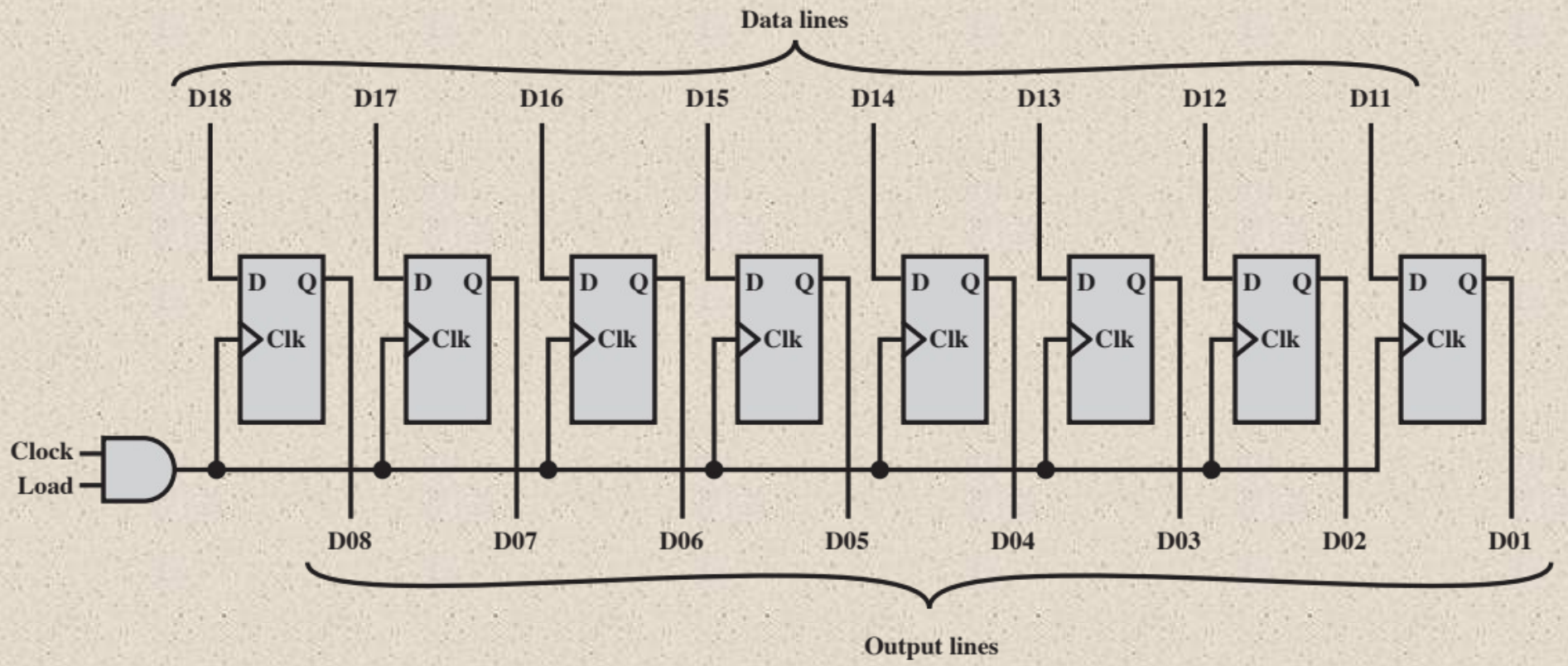


**Figure 11.30 8-Bit Parallel Register**

© 2016 Pearson Education, Inc., Hoboken, NJ. All rights reserved.

(a) Truth table

| C | B | A | Jc | Kc | Jb | Kb | Ja | Ka |
|---|---|---|---|---|---|---|---|---|
| 0 | 0 | 0 | 0 | d | 0 | d | 1 | d |
| 0 | 0 | 1 | 0 | d | 1 | d | d | 1 |
| 0 | 1 | 0 | 0 | d | d | 0 | 1 | d |
| 0 | 1 | 1 | 1 | d | d | 1 | d | 1 |
| 1 | 0 | 0 | d | 0 | 0 | d | 1 | d |
| 1 | 0 | 1 | d | 0 | 1 | d | d | 1 |
| 1 | 1 | 0 | d | 0 | d | 0 | 1 | d |
| 1 | 1 | 1 | d | 1 | d | 1 | d | 1 |

(b) Karnaugh maps

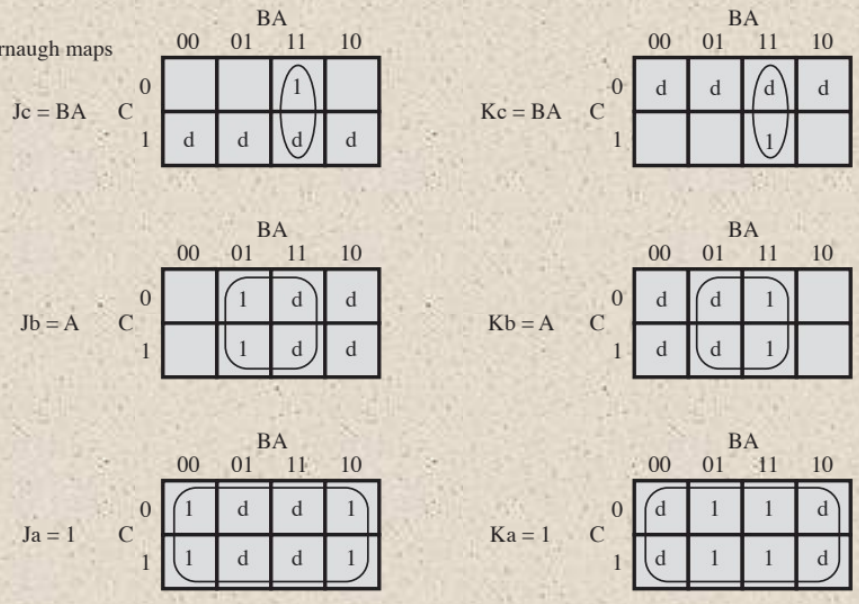


(c) Logic diagram

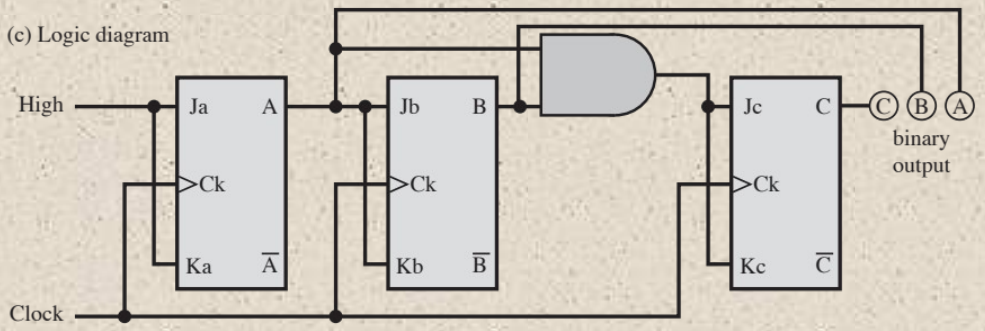


**Figure 11.31 Design of a Synchronous Counter**

© 2016 Pearson Education, Inc., Hoboken, NJ. All rights reserved.

# Table 11.11

# PLD Terminology

**Programmable Logic Device (PLD)**

A general term that refers to any type of integrated circuit used for implementing digital hardware, where the chip can be configured by the end user to realize different designs. Programming of such a device often involves placing the chip into a special programming unit, but some chips can also be configured "in-system". Also referred to as a field-programmable device (FPD).

**Programmable Logic Array (PLA)**

A relatively small PLD that contains two levels of logic, an AND-plane and an OR-plane, where both levels are programmable.

**Programmable Array Logic (PAL)**

A relatively small PLD that has a programmable AND-plane followed by a fixed OR-plane.

**Simple PLD (SPLD)**

A PLA or PAL.

**Complex PLD (CPLD)**

A more complex PLD that consists of an arrangement of multiple SPLD-like blocks on a single chip.

**Field-Programmable Gate Array (FPGA)**

A PLD featuring a general structure that allows very high logic capacity. Whereas CPLDs feature logic resources with a wide number of inputs (AND planes), FPGAs offer more narrow logic resources. FPGAs also offer a higher ratio of flip-flops to logic resources than do CPLDs.

**Logic Block**

A relatively small circuit block that is replicated in an array in an FPD. When a circuit is implemented in an FPD, it is first decomposed into smaller sub-circuits that can each be mapped into a logic block. The term logic block is mostly used in the context of FPGAs, but it could also refer to a block of circuitry in a CPLD.

© 2016 Pearson Education, Inc., Hoboken, NJ. All rights reserved.

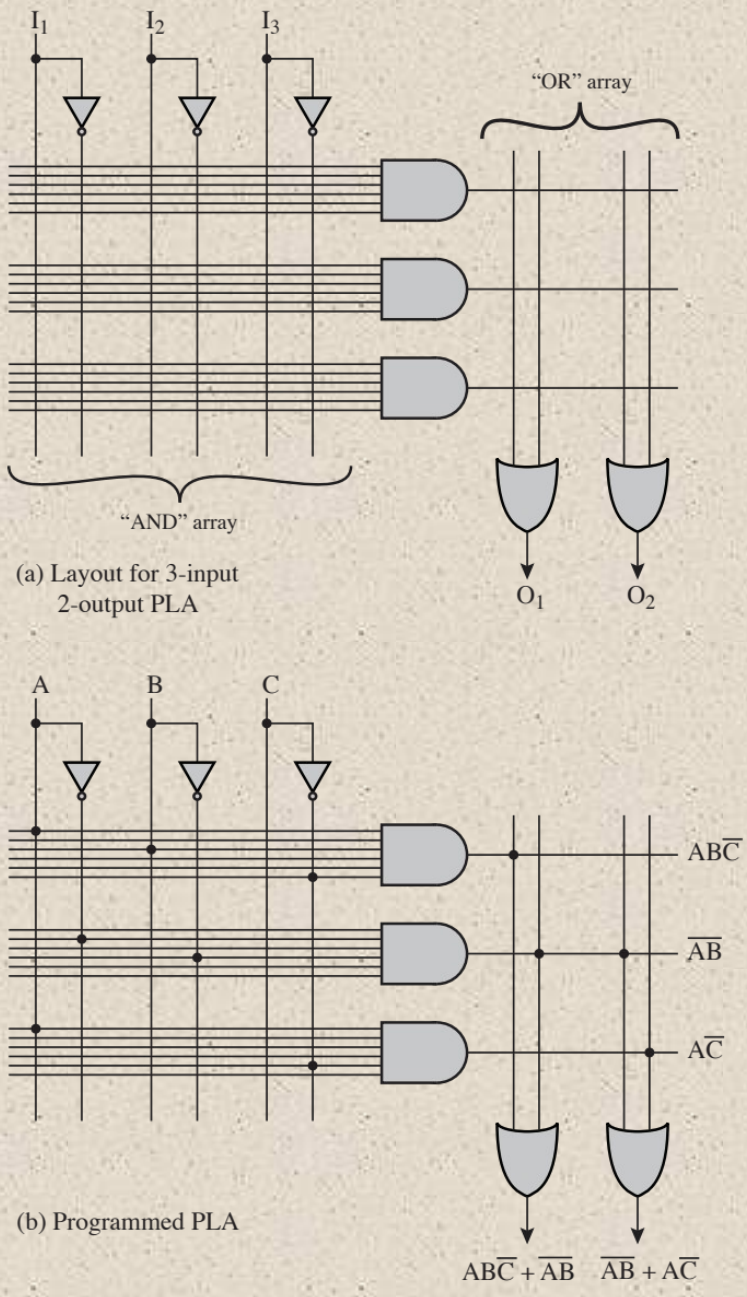


**Figure 11.32 An Example of a Programmable Logic Array**

© 2016 Pearson Education, Inc., Hoboken, NJ. All rights reserved.

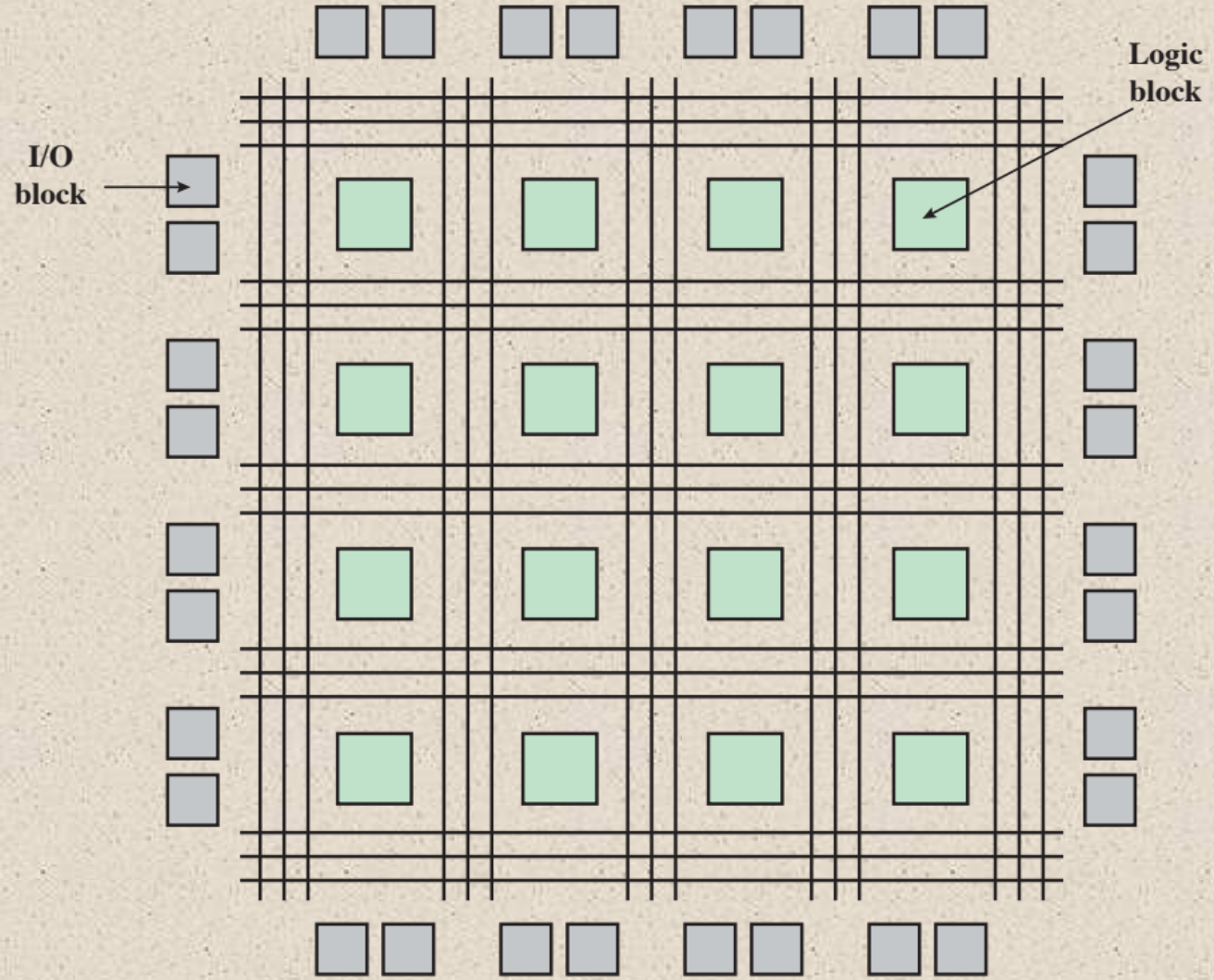


**Figure 11.33 Structure of an FPGA**

© 2016 Pearson Education, Inc., Hoboken, NJ. All rights reserved.

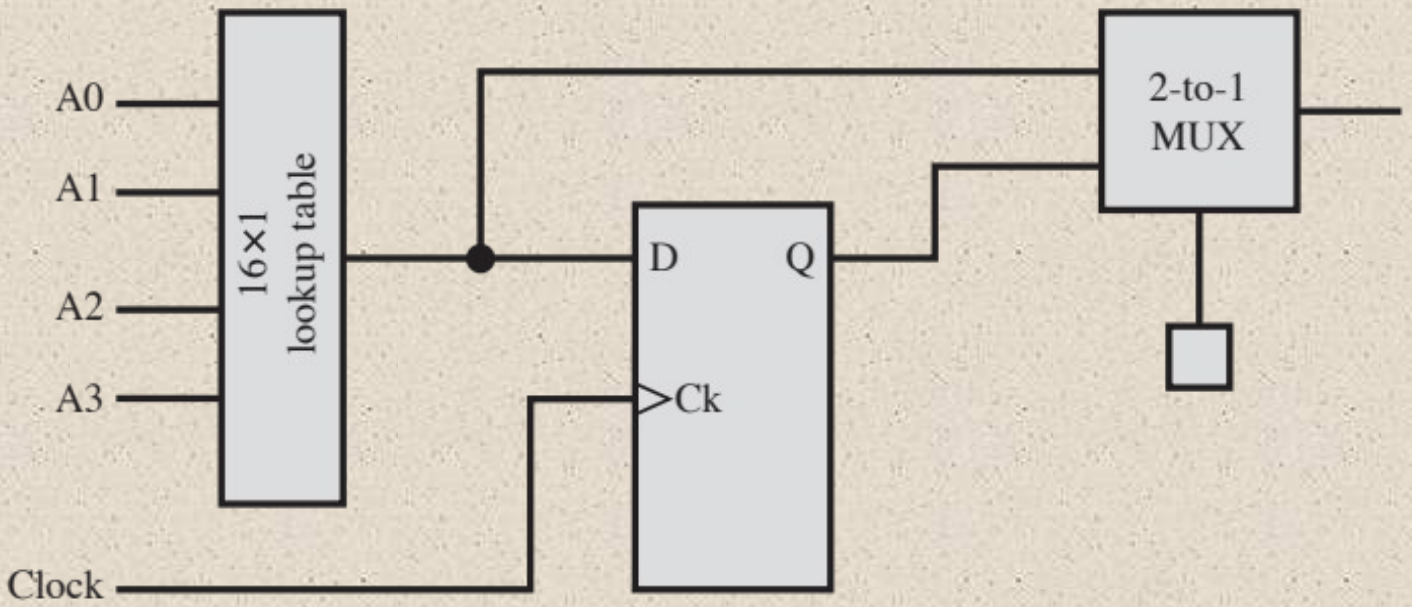


**Figure 11.34 A Simple FPGA Logic Block**

© 2016 Pearson Education, Inc., Hoboken, NJ. All rights reserved.

# Summary

## Chapter 11

## Digital Logic

- Boolean Algebra
- Gates
- Combinational Circuits
  - Implementation of Boolean Functions
  - Multiplexers
  - Decoders
  - Read-Only-Memory
  - Adders
- Sequential Circuits
  - Flip-Flops
  - Registers
  - Counters
- Programmable Logic Devices
  - Programmable Logic Array
  - Field-Programmable Gate Array

© 2016 Pearson Education, Inc., Hoboken, NJ. All rights reserved.